User Guide

MODULAR FORMWORK

LGW

02J099M

ULMA

DISCLAIMER:

Any safety provisions as directed by the appropriate governing agencies must be observed when using our products.

The pictures in this brochure are snapshots of situations at different stages of assembly, and therefore are not complete images. For the purpose of safety, they shall not be deemed as definite.

All instructions regarding safety and operation contained in this brochure, and the data on stress and loads must be respected. ULMA Construction's Technical Department must be consulted any time that field changes alter our equipment installation drawings.

The loads featured in this document, related to the basic parts of the product, are approximate.

Our equipment is designed to work with accessories and items produced by our company only. Combining such equipment with other brands is not only dangerous without having made all corresponding verifications, it also voids any and all our warranties.

The company reserves the right to introduce any modifications deemed necessary for the technical development of the product.

Safety sign

Control sign

Warning sign

Information sign

Original document produced and approved by ULMA.

1. Product description

LGW is a vertical formwork system for the shuttering of walls mainly geared towards residential construction for it being largely handset.

Quick overview of the basic product features

- Concrete pressures and deflections:
  - Maximum constant pressure: 60 kN/m^2
  - Maximum hydrostatic pressure for the 3m panel range: 75 kN/m^2

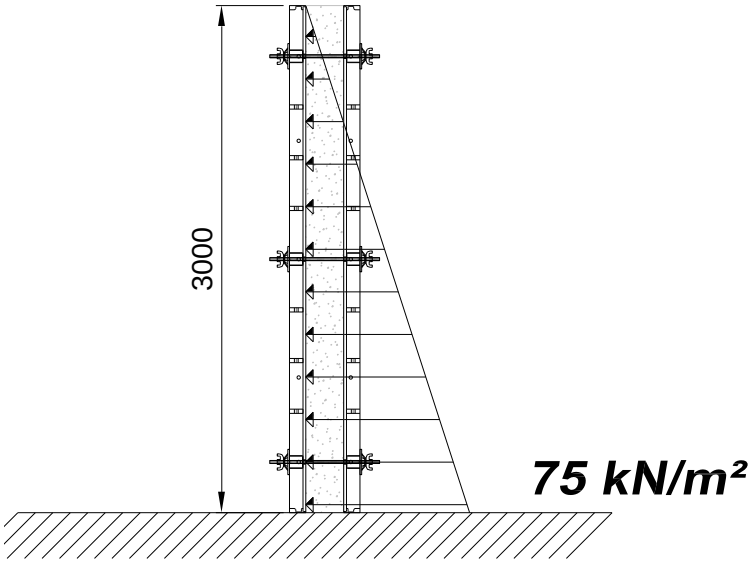

  - Maximum deflections: line 6 according to DIN 18202
- Columns:
  - Maximum width: 65 cm
  - Maximum constant pressure: 80 kN/m^2
- Large panel 3x0.9 (2.7 m^2) with 3 anchor points in height
- Weight of large panels:
  - Panel 3x0.9: 82.7 kg
  - Panel 2.4x0.9: 66.8 kg
- Panel heights: 3, 2.4, 1.2 and 0.6 m
- Panel widths: 09, 0.75, 0.6, 0.45 and 4 m
- All panels have lateral holes in the profiles for bulkhead, corner and column solutions (the latter with 0.75 m wide universal panels).

- The 15 mm thick plywood is joined to the steel structure with rivets.
- Safe assembly.
- There are different panel qualities available with regard to steel treatment and plywood:
    - Painted frame with phenolic plywood (PLY P)
    - Galvanised frame with phenolic plywood (PLY G)
    - Painted frame with EVERMAX board (EVER P)
    - Galvanised frame with EVERMAX board (EVER G)

2. Components and accessories

2.1. GRAPHIC DESCRIPTION

Item no.	Weight kg	Item name
		PANELS
		PAINTED FRAMES - PLYWOOD
1923300	85	PANEL LGW 3x0.9 PLY P (2.7 m^2)
1923304	71,5	PANEL LGW 3x0.75 PLY P (2.25 m^2)
1923308	61,5	PANEL LGW 3x0.6 PLY P (1.8 m^2)
1923312	51,5	PANEL LGW 3x0.45 PLY P (1.35 m^2)
1923316	40	PANEL LGW 3x0.3 PLY P (0.9 m^2) 
1923200	68,7	PANEL LGW 2,4x0,9 PLY P (2,16 m^2)
1923204	57,7	PANEL LGW 2,4x0,75 PLY P (1,8 m^2)
1923208	49,8	PANEL LGW 2,4x0,6 PLY P (1,44 m^2)
1923212	41,6	PANEL LGW 2,4x0,45 PLY P (1,08 m^2)
1923216	32,1	PANEL LGW 2,4x0,3 PLY P (0,72 m^2) 
1923100	39,8	PANEL LGW 1,2x0,9 PLY P (1,08 m^2)
1923104	32,4	PANEL LGW 1,2x0,75 PLY P (0,9 m^2)
1923108	27,7	PANEL LGW 1,2x0,6 PLY P (0,72 m^2)
1923112	23	PANEL LGW 1,2x0,45 PLY P (0,54 m^2)
1923116	17,1	PANEL LGW 1,2x0,3 PLY P (0,36 m^2) 

Item no.	Weight kg	Item name
1923000	23,1	PANEL LGW 0,6x0,9 PLY P (0,54 m^2)
1923004	18,5	PANEL LGW 0,6x0,75 PLY P (0,45 m^2)
1923008	15,8	PANEL LGW 0,6x0,6 PLY P (0,36 m^2)
1923012	13,1	PANEL LGW 0,6x0,45 PLY P (0,27 m^2)
1923016	9,2	PANEL LGW 0,6x0,3 PLY P (0,18 m^2) 
1923320	77,5	UNIVERSAL PANEL LGW 3x0.75 PLY P (2.25 m2)
1923220	63,3	UNIVERSAL PANEL LGW 2.4x0.75 PLY P (1.8 m2)
1923120	32,2	UNIVERSAL PANEL LGW 1.2x0.75 PLY P (0.9 m2)
1923020	18,4	UNIVERSAL PANEL LGW 0.6x0.75 PLY P (0.45 m2) 

Item no.	Weight kg	Item name
		GALVANISED FRAMES - PLYWOOD
1923301	85	PANEL LGW 3x0.9 PLY G (2.7 m^2)
1923305	71,5	PANEL LGW 3x0.75 PLY G (2.25 m^2)
1923309	61,5	PANEL LGW 3x0.6 PLY G (1.8 m^2)
1923313	51,5	PANEL LGW 3x0.45 PLY G (1.35 m^2)
1923317	40	PANEL LGW 3x0.3 PLY G (0.9 m^2)
		
1923201	68,7	PANEL LGW 2.4x0.9 PLY G (2.16 m^2)
1923205	57,7	PANEL LGW 2.4x0.75 PLY G (1.8 m^2)
1923209	49,8	PANEL LGW 2.4x0.6 PLY G (1.44 m^2)
1923213	41,6	PANEL LGW 2.4x0.45 PLY G (1.08 m^2)
1923217	32,1	PANEL LGW 2.4x0.3 PLY G (0.72 m^2)
		
1923101	39,8	PANEL LGW 1,2x0,9 PLY G (1,08 m^2)
1923105	32,4	PANEL LGW 1,2x0,75 PLY G (0,9 m^2)
1923109	27,7	PANEL LGW 1,2x0,6 PLY G (0,72 m^2)
1923113	23	PANEL LGW 1,2x0,45 PLY G (0,54 m^2)
1923117	17,1	PANEL LGW 1,2x0,3 PLY G (0,36 m^2)
		

Item no.	Weight kg	Item name
1923001	23,1	PANEL LGW 0,6x0,9 PLY G (0,54 m^2)
1923005	18,5	PANEL LGW 0,6x0,75 PLY G (0,45 m^2)
1923009	15,8	PANEL LGW 0,6x0,6 PLY G (0,36 m^2)
1923013	13,1	PANEL LGW 0,6x0,45 PLY G (0,27 m^2)
1923017	9,2	PANEL LGW 0,6x0,3 PLY G (0,18 m^2)
		
1923321	77,5	UNIVERSAL PANEL LGW 3x0.75 PLY G (2.25 m2)
1923221	63,3	UNIVERSAL PANEL LGW 2.4x0.75 PLY G (1.8 m2)
1923121	32,2	UNIVERSAL PANEL LGW 1.2x0.75 PLY G (0.9 m2)
1923021	18,4	UNIVERSAL PANEL LGW 0.6x0.75 PLY G (0.45 m2)
		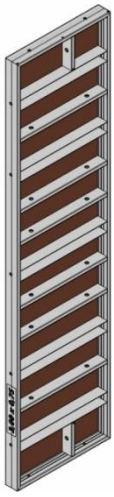

Item no.	Weight kg	Item name
		PAINTED FRAMES - EVERMAX BOARD
1923302	85	PANEL LGW 3x0,9 EVER P (2,7 m^2)
1923306	71,5	PANEL LGW 3x0,75 EVER P (2,25 m^2)
1923310	61,5	PANEL LGW 3x0,6 EVER P (1,8 m^2)
1923314	51,5	PANEL LGW 3x0,45 EVER P (1,35 m^2)
1923318	40	PANEL LGW 3x0,3 EVER P (0,9 m^2)
		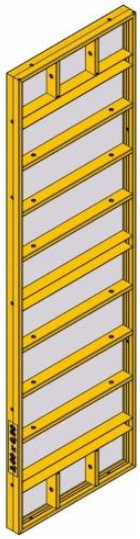
1923202	68,7	PANEL LGW 2,4x0,9 EVER P (2,16 m^2)
1923206	57,7	PANEL LGW 2,4x0,75 EVER P (1,8 m^2)
1923210	49,8	PANEL LGW 2,4x0,6 EVER P (1,44 m^2)
1923214	41,6	PANEL LGW 2,4x0,45 EVER P (1,08 m^2)
1923218	32,1	PANEL LGW 2,4x0,3 EVER P (0,72 m^2)
		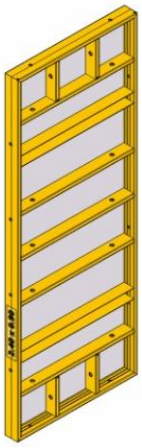
1923102	39,8	PANEL LGW 1,2x0,9 EVER P (1,08 m^2)
1923106	32,4	PANEL LGW 1,2x0,75 EVER P (0,9 m^2)
1923110	27,7	PANEL LGW 1,2x0,6 EVER P (0,72 m^2)
1923114	23	PANEL LGW 1,2x0,45 EVER P (0,54 m^2)
1923118	17,1	PANEL LGW 1,2x0,3 EVER P (0,36 m^2)
		

Item no.	Weight kg	Item name
1923002	23,1	PANEL LGW 0,6x0,9 EVER P (0,54 m^2)
1923006	18,5	PANEL LGW 0,6x0,75 EVER P (0,45 m^2)
1923010	15,8	PANEL LGW 0,6x0,6 EVER P (0,36 m^2)
1923014	13,1	PANEL LGW 0,6x0,45 EVER P (0,27 m^2)
1923018	9,2	PANEL LGW 0,6x0,3 EVER P (0,18 m^2)
		
1923322	77,5	UNIVERSAL PANEL LGW 3x0.75 EVER P (2.25 m2)
1923222	63,3	UNIVERSAL PANEL LGW 2.4x0.75 EVER P (1.8 m2)
1923122	32,2	UNIVERSAL PANEL LGW 1.2x0.75 EVER P (0.9 m2)
1923022	18,4	UNIVERSAL PANEL LGW 0.6x0.75 EVER P (0.45 m2)
		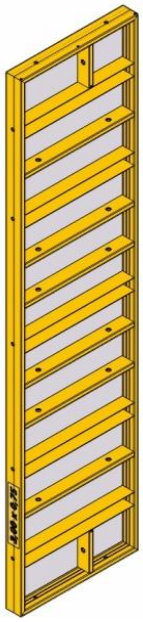

Item no.	Weight kg	Item name
		GALVANISED FRAMES - EVERMAX BOARD
1923303	85	PANEL LGW 3x0,9 EVER G (2,7 m^2)
1923307	71,5	PANEL LGW 3x0,75 EVER G (2,25 m^2)
1923311	61,5	PANEL LGW 3x0,6 EVER G (1,8 m^2)
1923315	51,5	PANEL LGW 3x0,45 EVER G (1,35 m^2)
1923319	40	PANEL LGW 3x0,3 EVER G (0,9 m^2) 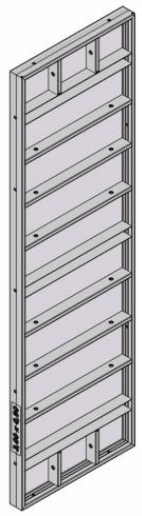
1923203	68,7	PANEL LGW 2,4x0,9 EVER G (2,16 m^2)
1923207	57,7	PANEL LGW 2,4x0,75 EVER G (1,8 m^2)
1923211	49,8	PANEL LGW 2,4x0,6 EVER G (1,44 m^2)
1923215	41,6	PANEL LGW 2,4x0,45 EVER G (1,08 m^2)
1923219	32,1	PANEL LGW 2,4x0,3 EVER G (0,72 m^2) 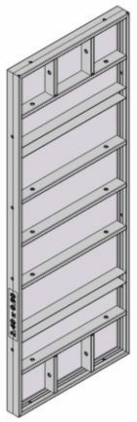
1923103	39,8	PANEL LGW 1,2x0,9 EVER G (1,08 m^2)
1923107	32,4	PANEL LGW 1,2x0,75 EVER G (0,9 m^2)
1923111	27,7	PANEL LGW 1,2x0,6 EVER G (0,72 m^2)
1923115	23	PANEL LGW 1,2x0,45 EVER G (0,54 m^2)
1923119	17,1	PANEL LGW 1,2x0,3 EVER G (0,36 m^2) 

Item no.	Weight kg	Item name
1923003	23,1	PANEL LGW 0,6x0,9 EVER G (0,54 m^2)
1923007	18,5	PANEL LGW 0,6x0,75 EVER G (0,45 m^2)
1923011	15,8	PANEL LGW 0,6x0,6 EVER G (0,36 m^2)
1923015	13,1	PANEL LGW 0,6x0,45 EVER G (0,27 m^2)
1923019	9,2	PANEL LGW 0,6x0,3 EVER G (0,18 m^2) 
1923323	77,5	UNIVERSAL PANEL LGW 3x0.75 EVER G (2.25 m2)
1923223	63,3	UNIVERSAL PANEL LGW 2.4x0.75 EVER G (1.8 m2)
1923123	32,2	UNIVERSAL PANEL LGW 1.2x0.75 EVER G (0.9 m2)
1923023	18,4	UNIVERSAL PANEL LGW 0.6x0.75 EVER G (0.45 m2) 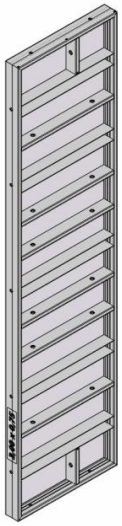

Item no.	Weight kg	Item name
		CORNER PANELS
1923324	64,8	INSIDE CORNER PANEL LGW 3 PLY P
1923224	52	INSIDE CORNER PANEL LGW 2.4 PLY P
1923124	28	INSIDE CORNER PANEL LGW 1.2 PLY P
1923024	15,1	INSIDE CORNER PANEL LGW 0.6 PLY P
		
1923371	27,8	OUTSIDE CORNER PANEL LGW 3 P
1923271	22,4	OUTSIDE CORNER PANEL LGW 2.4 P
1923171	11,2	OUTSIDE CORNER PANEL LGW 1.2 P
1923071	5,5	OUTSIDE CORNER PANEL LGW 0.6 P
		
1923560	53	LGW HINGED INS CORNER 3 P
1923555	43	LGW HINGED INS CORNER 2.4 P
1923550	21,6	LGW HINGED INS CORNER 1.2 P
1923545	11,2	LGW HINGED INS CORNER 0.6 P
		

Item no.	Weight kg	Item name
1923585	34	LGW HINGED OUT CORNER 3 P
1923580	27,2	LGW HINGED OUT CORNER 2,4 P
1923570	13,6	LGW HINGED OUT CORNER 1,2 P
1923565	6,9	LGW HINGED OUT CORNER 0,6 P
		
1923325	64,8	INSIDE CORNER PANEL LGW 3 PLY G
1923225	52	INSIDE CORNER PANEL LGW 2.4 PLY G
1923125	28	INSIDE CORNER PANEL LGW 1.2 PLY G
1923025	15,1	INSIDE CORNER PANEL LGW 0.6 PLY
		
1923372	27,8	OUTSIDE CORNER PANEL LGW 3 G
1923272	22,4	OUTSIDE CORNER PANEL LGW 2.4 G
1923172	11,2	OUTSIDE CORNER PANEL LGW 1.2 G
1923072	5,5	OUTSIDE CORNER PANEL LGW 0.6 G
		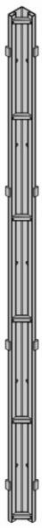

Item no.	Weight kg	Item name
1923515	53	LGW HINGED INS CORNER 3 G
1923510	43	LGW HINGED INS CORNER 2.4 G
1923505	21,6	LGW HINGED INS CORNER 1.2 G
1923500	11,2	LGW HINGED INS CORNER 0.6 G
		
1923535	34	LGW HINGED OUT CORNER 3 G
1923530	27,2	LGW HINGED OUT CORNER 2,4 G
1923525	13,6	LGW HINGED OUT CORNER 1,2 G
1923520	6,9	LGW HINGED OUT CORNER 0,6 G
		
1923326	64,8	INSIDE CORNER PANEL LGW 3 EVER P
1923226	52	INSIDE CORNER PANEL LGW 2.4 EVER P
1923126	28	INSIDE CORNER PANEL LGW 1.2 EVER P
1923026	15,1	INSIDE CORNER PANEL LGW 0.6 EVER P
		

Item no.	Weight kg	Item name
1923327	64,8	INSIDE CORNER PANEL LGW 3 EVER G
1923227	52	INSIDE CORNER PANEL LGW 2.4 EVER G
1923127	28	INSIDE CORNER PANEL LGW 1.2 EVER G
1923027	15,1	INSIDE CORNER PANEL LGW 0.6 EVER G
		
		FILLERS
1923352	22,1	COMPENSATION TUBE LGW 3 P
1923252	17,8	COMPENSATION TUBE LGW 2.4 P
1923152	9	COMPENSATION TUBE LGW 1.2 P
1923052	4,5	COMPENSATION TUBE LGW 0.6 P
		
1923354	51,9	COMPENSATION PLATE LGW 3 P
1923254	42,4	COMPENSATION PLATE LGW 2.4 P
1923154	23,8	COMPENSATION PLATE LGW 1.2 P
		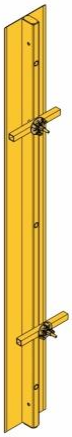

Item no.	Weight kg	Item name
1923353	22,1	COMPENSATION TUBE LGW 3 G
1923253	17,8	COMPENSATION TUBE LGW 2.4 G
1923153	9	COMPENSATION TUBE LGW 1.2 G
1923053	4,5	COMPENSATION TUBE LGW 0.6 G
		
1923355	51,8	COMPENSATION PLATE LGW 3 G
1923255	42,4	COMPENSATION PLATE LGW 2.4 G
1923155	23,8	COMPENSATION PLATE LGW 1.2 G
		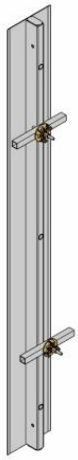
		LIFTING / CONNECTING ELEMENTS
1920835	8	NEVI LIFTING HOOK
		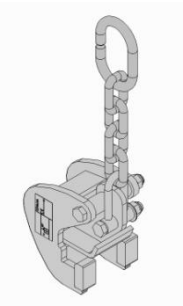 Galvanised

Item no.	Weight kg	Item name
1920818	1.4	MEGALITE CLAMP
		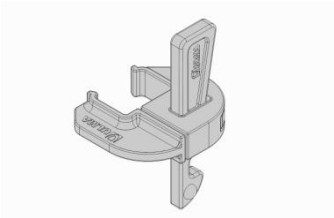 Zinc-coated
1920851	3.4	NEVI CLAMP
		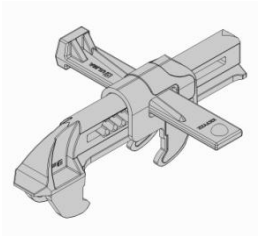 Galvanised
		STIFFENING
1850433	18,2	COMAIN WALER 3
1850159	9,8	COMAIN WALER 1.6
1850162	4,8	COMAIN WALER 0.75
		 Painted black
1850164	0,45	HOOK
1850183	0,7	LONG HOOK
		 Galvanised
7238000	0,73	PLATE NUT 15
		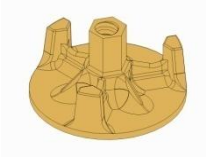 Bichromate-treated

Item no.	Weight kg	Item name
		PUSH-PULL PROPS
1856120	19,8	PUSH-PULL PROP LIGHT 2.5-3.85 
1856130	9,2	PUSH-PULL PROP LIGHT 1.55-2.5 
1856140	1,5	LIGHT PUSH-PULL PROP HEAD 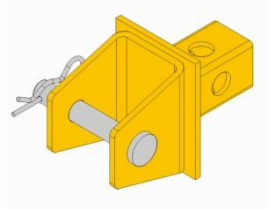 Painted yellow
1861122	0,3	PANEL BOLT 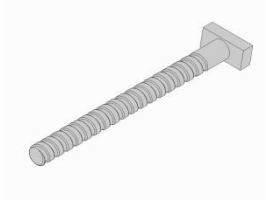 Zinc-coated
7238001	0,22	HEXAGONAL NUT 15  Zinc-coated

Item no.	Weight kg	Item name
1856125	2.2	LGR PUSH-PULL PROP SHOE 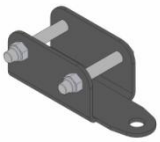
1900134 1900123 1908168 1900147	7.7 24.2 43.3 51	PUSH-PULL PROP 1.1-1.7 PUSH-PULL PROP 2.4-3.5 PUSH-PULL PROP 3.6-4.8 PUSH-PULL PROP 5-6 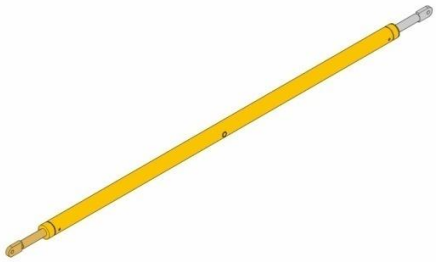
1920804	1	PUSH-PULL PROP HEAD 25 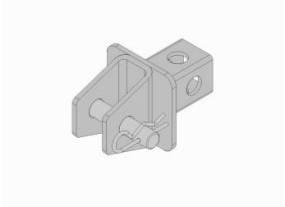
1900144	4.95	PUSH-PULL PROP SHOE 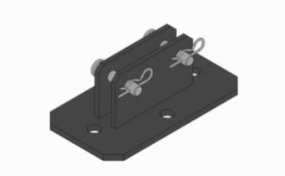
		WORKING PLATFORMS
1920854	1,5	NEVI POST BRACKET 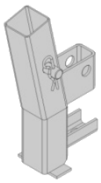 Galvanised
1902210	3,4	SAFETY HANDRAIL POST 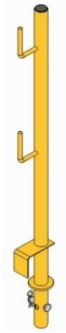 Painted yellow

Item no.	Weight kg	Item name
1861094	15,2	ORMA WALKWAY BRACKET  Painted black
		CLIMBING
1900386	36,5	ORMA CLIMBING BRACKET  Painted black
1901080	1	CONE DW 15/M24  Bichromate-treated
1901083	0,8	CLIMBING RING NT15  Bichromate-treated
1901250	3	CONE-WALER TIE 90 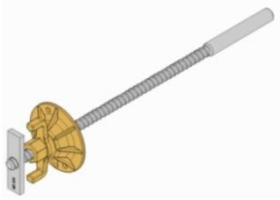

Item no.	Weight kg	Item name
9053013	0,54	HEXAGONAL BOLT M24x120 DIN931-10.9  Blued
0238005	0.54	CONE AWF 
0238006	0.51	CLIMBING RING AWF 
0242410	0.46	BOLT M24 x100 DIN931-8.8 
0230005	0.56	FIX ANCHOR DW15  Black
0230024	0.37	TIE ROD 15/0.235 
2125289	3.7	TUBE 48/1.1
2125290	5.5	TUBE 48/1.6
2125291	7	TUBE 48/2.1
2125647	8.7	TUBE 48/2.6
2125249	11.4	TUBE 48/3.1
2125648	12.1	TUBE 48/3.6
2125250	14.6	TUBE 48/4.1 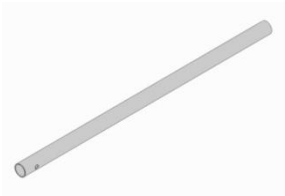

Item no.	Weight kg	Item name
2125148	1.2	RIGHT ANGLE COUPLER 48/48
2125147	1.3	SWIVEL COUPLER 48/48
		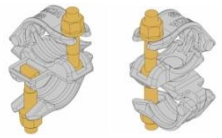
1900134	7.8	PUSH-PULL PROP 1.1-1.7
1900123	24.2	PUSH-PULL PROP 2.4-3.5
		
1920804	1	PUSH-PULL PROP HEAD 25
		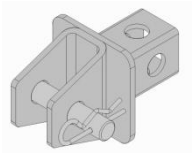
		TIES
0230100	1.7	TIE ROD 15/1
0230120	2	TIE ROD 15/1.2
0230150	2.5	TIE ROD 15/1.5
0230200	3.3	TIE ROD 15/2
0230600	10	TIE ROD 15/6
		
1861692	0.33	ECCENTRIC WASHER
		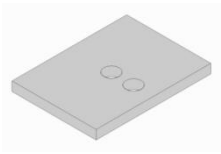 Zinc-coated
7238001	0.22	HEXAGONAL NUT 15
		

Item no.	Weight kg	Item name
1900256	1.24	PLATE WASHER NUT 15
		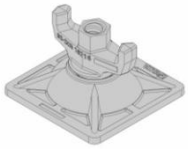 Geometric washer
1908158	2.5	PLATE NUT D15 200x150
		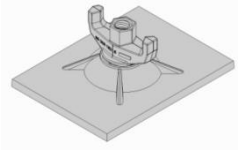 Zinc-coated
1920000	0.76	ML BULKHEAD HOOK
		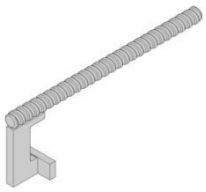 Zinc-coated
1861122	0.3	WALER HOOK
		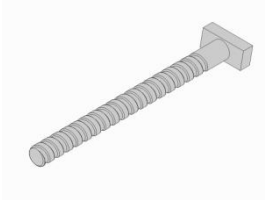 Zinc-coated
		CONSUMABLES
9372796	4	SPACER TUBE 22/25 (3M-25UNITS)
9372791	1.5	END CONE 22 BAG (250 UNITS)
9372783	0.75	PLUG 20 BAG (250 UNITS)
		
9372797	5.75	PLASTIC SLEEVE 22/26 (2M-25UNITS)
9372794	2.25	WATER STOP CAP 26 BAG (250 UNITS)
9372786	1	WATER STOP CAP PLUG BAG (250 UNITS)
		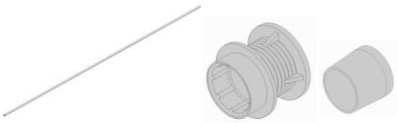
0230004	0.6	WATER STOP DW15
9372795	2.5	ADAPT WATER STOP BAG (250 UNITS)
		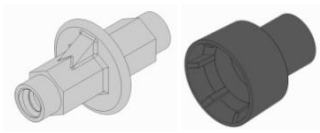

Item no.	Weight kg	Item name
9372816	1,35	CHAMFER STRIP LGR 3 m  Plastic

2.2. ITEM DESCRIPTION

2.2.1. PANELS

The panel range of the LGW system is as follows:

- Heights: 3, 2.4, 1.2 and 0.6 m
- Widths: 09, 0.75, 0.6, 0.45 and 0.3 m

These panels are made up of a perimeter frame of steel profiles to which several tubular ribs are welded. On the resulting structure the plywood is riveted working as phenolic shuttering face.

There are U-shaped ribs for the fixing of the form ties (15 mm tie rod). The phenolic plywood has also the corresponding holes for the insertion of ties.

The tubular ribs provide the frame with stiffness and have sleeved holes for the attachment of system accessories.

Likewise, the vertical profiles of the steel frame have several lateral holes for common solutions such as bulkheads, corners, columns, etc.

The shuttering face consists of a 15 mm thick plywood sheet that fits into the frame and is fixed to it with rivets. The plywood edge is protected by the perimeter profile of the frame and the gap between both surfaces is filled up with silicone.

The tie holes in the plywood are protected with plastic sleeves against wear and tear.

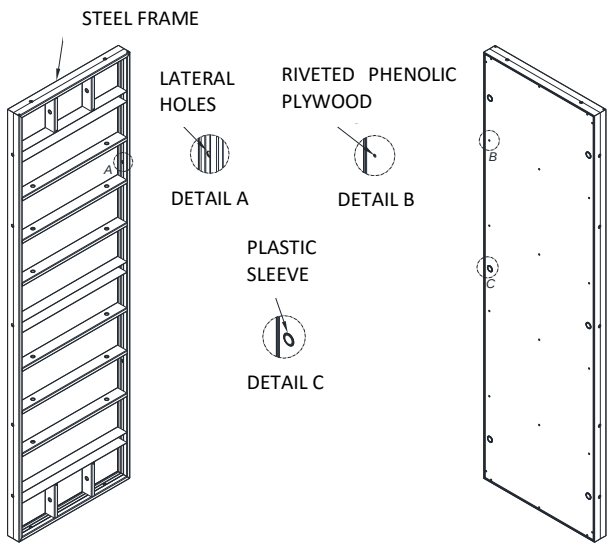

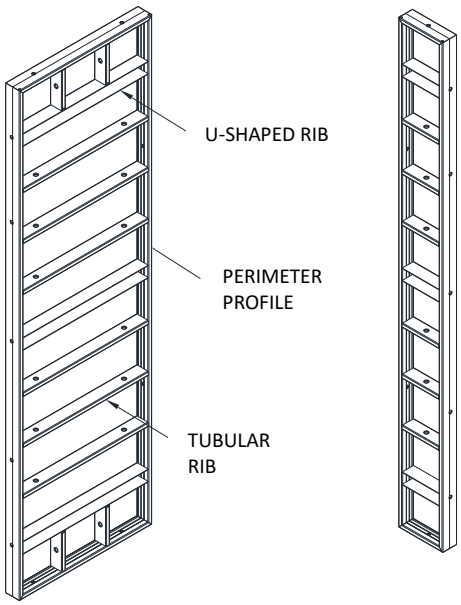

2.2.2. UNIVERSAL PANELS

The range of LGW universal panels is as follows:

- Heights: 3, 2.4, 1.2 and 0.6 m
- Width: 0.75 m

These panels, just like the standard panels have a steel frame made up of perimeter profiles and tubular ribs. In addition to these features, they have several U-shaped multi-punched ribs for the setting of different widths for bulkheads and columns.

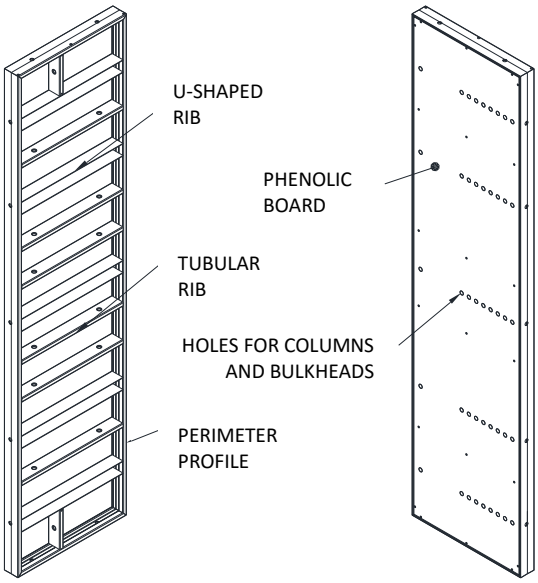

In addition to being used for columns of different dimensions (up to 65 x 65 cm), universal panels can also be used as wall panels and for corners and bulkheads.

When used as wall panels, the same number of TIE RODS as the number of U ribs that the UNIVERSAL PANEL has in height should be placed.

The distance to the exterior from the first hole of the UNIVERSAL PANEL is 58 mm.

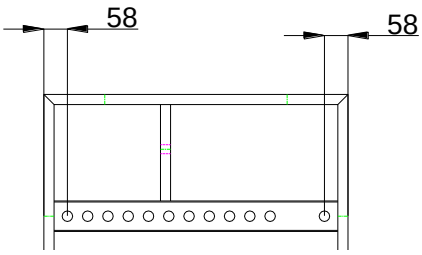

Taking into account that the size of the PLATE WASHER NUT is 120 x 120 mm, when the UNIVERSAL PANEL is used as wall panel there are two options:

- Reinforce joints with WALERS
- Use PLATE NUT D15 200x150.

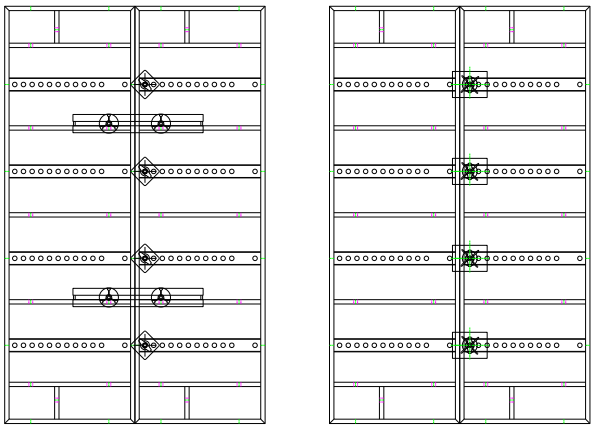

PLATE WASHER NUT 15
+
WHALERS

PLATE NUT D15 200x150

2.2.3. INSIDE CORNER PANEL

The range of LGW inside corner panels is as follows:

- Heights: 3, 2.4, 1.2 and 0.6 m
- Width: 0.3 m

These corner panels are used for the inside wall face of 90° corners. The item measures 0.3 x 0.3 m towards each side. The structure consists of a steel frame and plywood riveted to it. The frame is made up of vertical profiles and plate ribs.

The plywood (shuttering face) has the corresponding holes for the insertion of the ties.

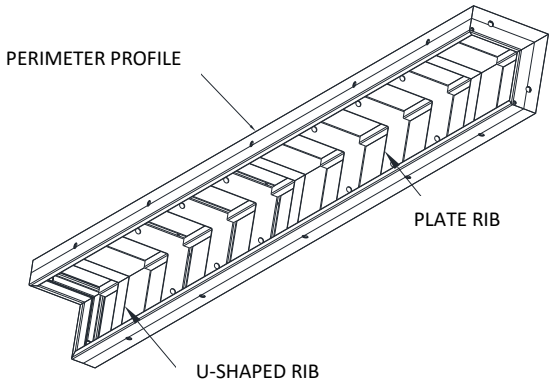

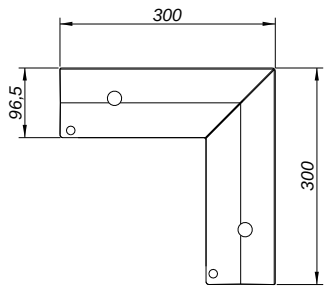

2.2.4. OUTSIDE CORNER PANEL

The range of LGW outside corner panels is as follows:

- Heights: 3, 2.4, 1.2 and 0.6 m

These corner panels are used for the outside wall face of 90° corners. They are completed with the inside corner panel on the other face.

The item consists of rectangular bent steel sheet with welded steel profiles at both sides used for the joining of adjacent panels with clamps.

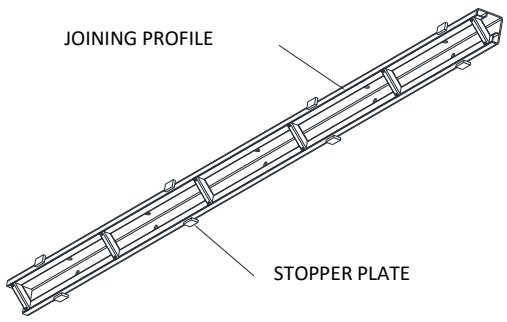

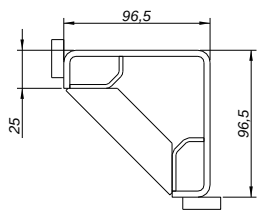

2.2.5. INSIDE HINGED CORNER

The range of LGW inside hinged corners is as follows:

- Heights: 3, 2.4, 1.2 and 0.6 m

These corners are used for the inside wall face of corners not 90°. It is completely made of steel consisting of two symmetrical parts which rotate around a hinge. The shuttering face in this case is steel sheet. The vertical end profiles are fixed with clamps to adjacent panels. But there are also holes punched in the profiles for the use with pins and nuts. The panel is reinforced with intermediate reinforcement plates.

There are NO holes for ties in this item.

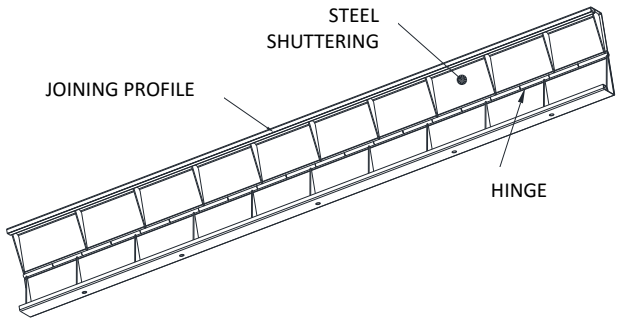

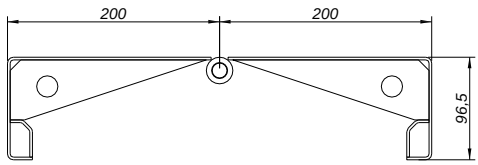

2.2.6. OUTSIDE HINGED CORNER

The range of LGW outside hinged corners is as follows:

- Heights: 3, 2.4, 1.2 and 0.6 m

These corners are used for the outside wall face of corners not 90°. It is completely made of steel consisting of two symmetrical parts which rotate around a hinge. The shuttering face in this case is steel sheet. The vertical end profiles are fixed with clamps to adjacent panels. But there are also holes punched in the profiles for the use with pins and nuts. The panel is reinforced with intermediate reinforcement plates.

There are NO holes for ties in this item.

.

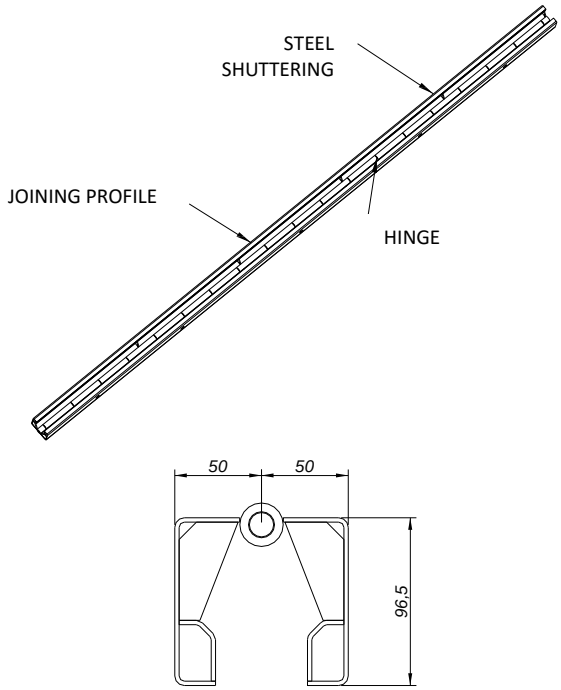

2.2.7. LGW FILLER TUBE

It is made up of a 50 mm wide U-shaped profile with some stopper plates for the positioning of the compensation tube between adjacent panels. The reinforcement plates reduce deflection,
and the holes are for the form ties (d=15mm tie rods).

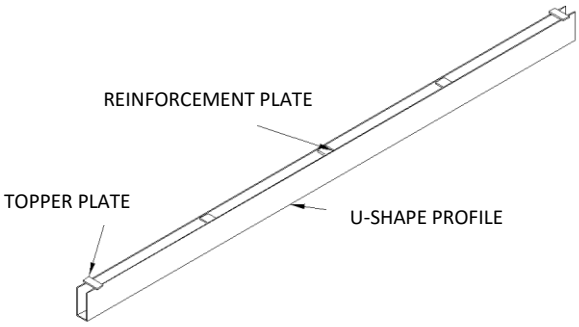

2.2.8. LGW COMPENSATION PLATE

It is basically a steel plate used as filler between panels with a width range of 8 to 30 cm.
The shuttering face is steel sheet. The central tube welded to the sheet has holes for the insertion of the tie rods. Depending on the height, the compensation plate has one or two stopper tubes to help aligning the plate to the plane of the panels.

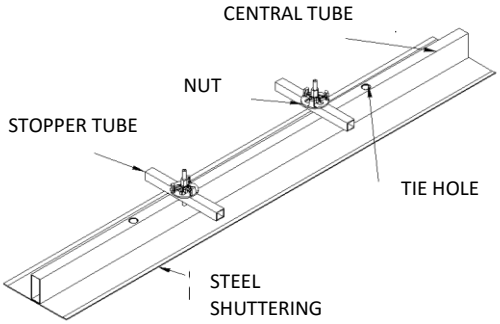

2.2.9. GANCHO IZADO NEVI

The lifting hook is an auxiliary item for the lifting of panels or panel gangs by crane.

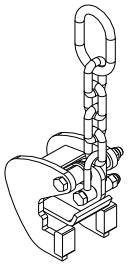

It is designed for the lifting of a maximum load of 1200 kg.
As a general rule, two brackets are used per panel or gang.

2.2.10. MEGALITE CLAMP

The MEGALITE clamp is the main connecting element of the LGW system.
It is used for the horizontal as well as vertical joining of individual panels and for the assembly of gangs. It ensures a completely watertight connection.
This item can only be used for the joining of two panels directly to each other, i.e. without any compensation between them.

It consists of three components: a fixed part (2 elements joined together with rivets), a mobile part and a wedge.

Upon fixing the wedge, the mobile part turns on the fixed part and presses the outside profile. The wedge is fixed by hitting it with a hammer from any of the both sides (it is captive, as it is enclosed in the fixed part).

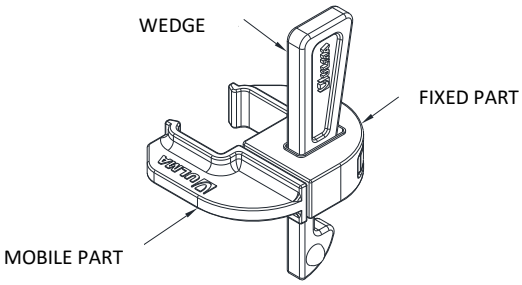

2.2.11. NEVI CLAMP

The NEVI clamp is an item for the horizontal as well as vertical joining of individual panels and for the assembly of panel gangs. It ensures a completely watertight connection.

It can join wood or metal fillers of up to 12 cm placed between two consecutive panels.

The mobile part glides on the fixed part until reaching the desired opening, where it is then fixed by hitting the wedge with a hammer. The wedge is made captive with a rivet.

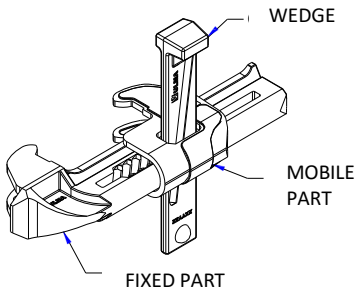

2.2.12. COMAIN WALER

The Comain Waler comes in three lengths 0.75, 1.6 and 3 m, and it is used to provide stiffness to the lifted gangs.

It consists of two rectangular steel profiles joined together leaving a gap for the placing of the Comain hook. The hook connects the waler to the panel hold by a plate nut 15. The length used depends on the height and dimensions of the panels to be lifted up. As a general rule, the 3 m waler is used with 4 hooks and plate nuts, while the 1.6 and 0.75 m walers are used with 2 hooks only.

These walers are also used for wall stop-ends and as item for the alignment of fillers exceeding 5 cm.

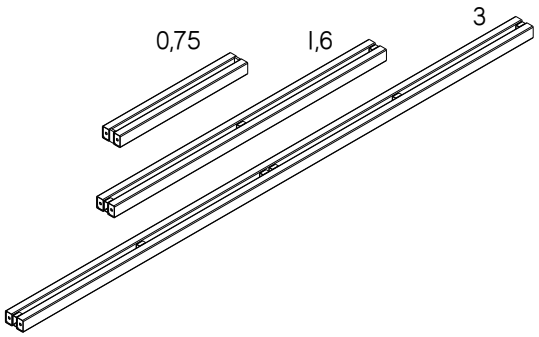

2.2.13. FASTENER

This item ties the Comain walers to the panels

The fastener is a hook with a 200-mm long multiple-start thread (diwidag) (the LONG HOOK 350 MM) used to fasten components together. It is always used with the plate nut.

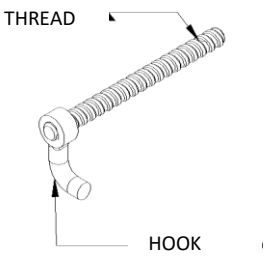

2.2.14. FIXED PLATE NUT

It is a hexagonal nut with a flat surface on which the panels rest. It is used to join TIE RODS 15 and does not allow for any deflection.

PERMISSIBLE WORKING LOAD: 90kN

2.2.15. LIGHT PUSH-PULL PROPS

These components are used in the panel assembly-process to stabilise the panels against wind loads and to plumb the erected assemblies. They work under tensile and compression loads.

Depending on the height of the formwork, one or other type of push-pull prop or combinations of them will be used

ITEM NUMBER	NAME	WEIGHT
1856120	Push-Pull Prop 2.5-3.85	19.8
1856130	Push-Pull Prop 1.55-2.5	9.2

2.2.16. LIGHT PUSH-PULL PROP HEAD

This actions as a joint between the panel and the LIGHT PUSH-PULL PROPS used to stabilize the assemblies.

This head can be fitted on the holes in the ribs:

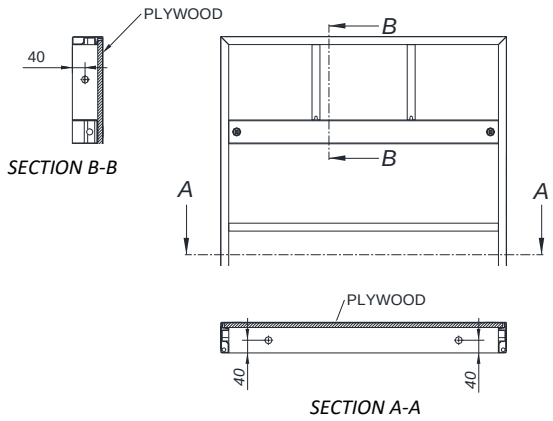

It can be placed vertically as well as horizontally. The assembly process consists in inserting the pin into the holes of the tubular ribs and the head's drilled tube. It is fastened with hexagonal nut 15.

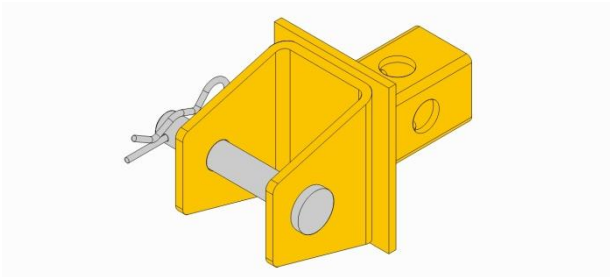

The head includes the cotter pin R for the safe fixing of the push-pull prop.

2.2.17. WALER HOOK

This part has several functions:

- for 90° connection between a universal panel and a standard panel
- for the fixing of push-pull prop head and post bracket to the panel ribs
- for the fixing of the walkway bracket to the rib holes in vertical direction

It consists of a threaded rod with head at one end.

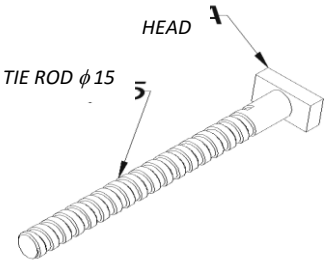

2.2.18. HEXAGONAL NUT 15

Fixing element with 30mm between faces, 50mm long, and which accepts any D15mm TIE ROD or FASTENER.

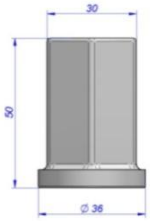

WORKING LOAD HEXAGONAL NUT 15mm: 90kN

2.2.19. LGR PUSH-PULL PROP SHOE

Element for tying the LIGHT PUSH-PULL PROPS to the ground comprising of two plates with pins which house the PUSH-PULL PROPS.

This part must be fixed to the footing using the D21mm hole in the base plate in which the necessary anchors are inserted.

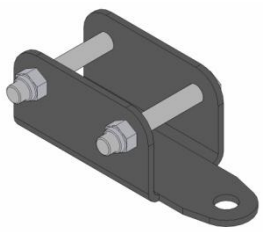

2.2.20. PUSH-PULL PROPS

They are used in the assembly process to stabilise the panels against wind loads and to plumb the erected assemblies. They work under tensile and compression loads.

ITEM NUMBER	NAME	WEIGHT (kg.)
1900134	Push-pull prop 1.1-1.7	7.7
1900123	Push-pull prop 2.4-3.5	24.3
1908168	Push-pull prop 3.6-4.8	43.3
1900147	Push-pull prop 5-6	51.3

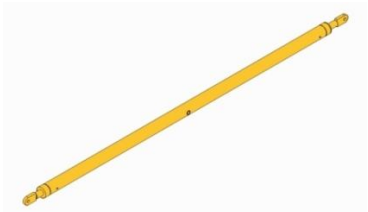

These are formed by a tubular structure with nuts welded to the right and left ends in which the respective screw jacks are housed.

The push-pull props are fastened on one side to the push-pull prop fixation on the bottom part of the walers of the PANELS and on the other side to the PUSH-PULL PROP SHOE using locking pins.

2.2.21. PUSH-PULL PROP HEAD 25

This actions as a joint between the panel and the PUSH-PULL PROPS (sub-paragraph 2.2.22) used to stabilize the assemblies.

As in the PUSH PULL PROP HEAD, this head can be fitted horizontally or vertically in the holes in the panel as shown in sub-paragraph 2.2.16

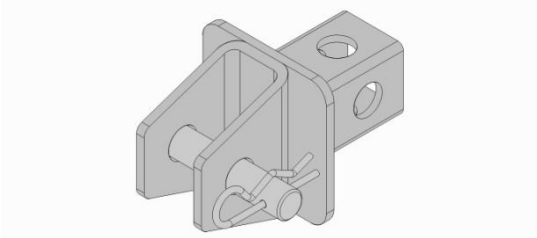

2.2.22. PUSH-PULL PROP SHOE

Element for tying the PUSH-PULL PROPS to the ground comprising of two plates with pins which house the PUSH-PULL PROPS.

This part must be fixed to the footing using the D21mm holes in the base plate in which the necessary anchors are inserted.

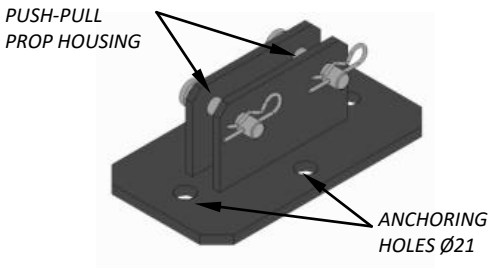

2.2.23. NEVI POST BRACKET

The post bracket is used for the placing of the handrail post to make protective railing opposite the working platform.

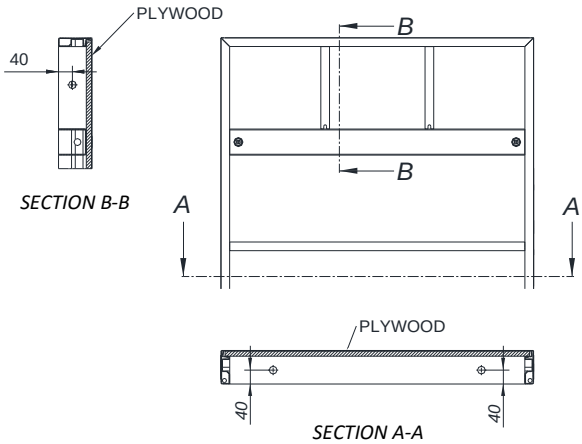

It can be placed vertically as well as horizontally. The assembly process is the same as for the push pull prop head: the pin is inserted into the holes of the tubular ribs after being passed through the head's drilled tube; it is then fastened with a hexagonal nut.

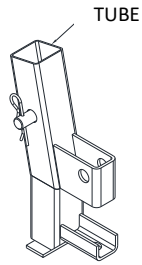

This item has a pin and a cotter pin R attached to it for the safe assembly of the post bracket.

2.2.24. SAFETY HANDRAIL POST

The safety handrail post consists of a vertical round tube with rods welded to it for the placing of wood planks to make up front safety railing. At the base, it carries a plate for the support of wood planks as toeboard.

The safety handrail post is attached to the post bracket by inserting the end of the round tube into one of the square tubes of the post bracket, and fastened with pin.

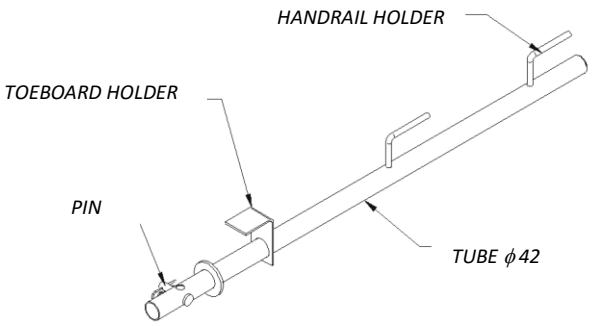

This item has a pin and a cotter pin R attached to it for the safe assembly of the post bracket.

2.2.25. WALKWAY BRACKET

The walkway bracket is attached to the panels to make working platforms for pouring works or any other tasks to be carried out on the formwork. Decking and nailing planks to the plastic blocks of the walkway brackets makes up the working platform.

In addition, it provides for the fixing of handrails and toeboards (with planks).

The walkway bracket is assembled to the panel by inserting the pin of the bracket into the holes of the horizontal ribs closest to the panel's top profile, and by resting the stopper onto a lower rib in order to provide stability to the assembly.

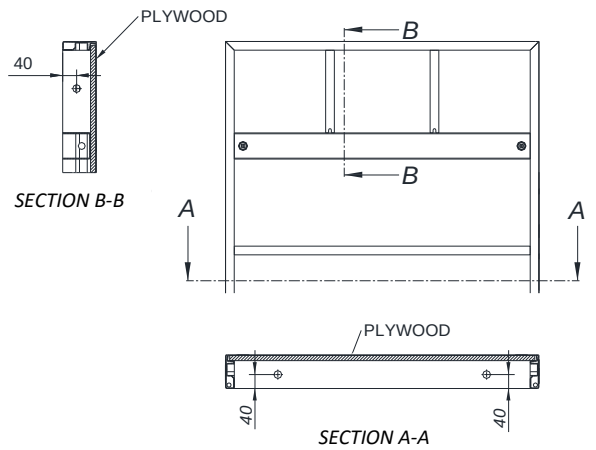

It can also be assembled to the vertical ribs through the lateral holes (in this case, it is fastened with panel bolt and hexagonal nut 15).

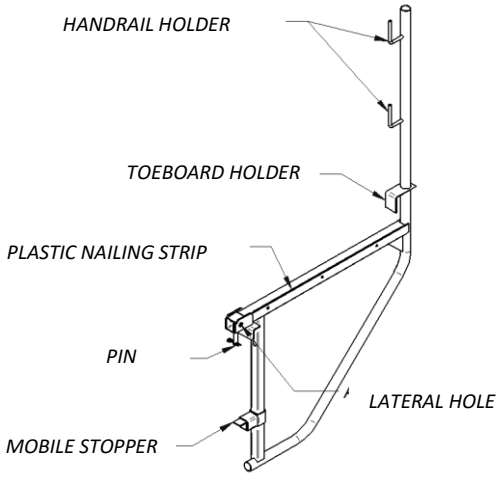

The pin is secured with a cotter pin R attached to it to prevent problems during lifting.

2.2.26. CLIMBING BRACKET

The climbing bracket is used for the construction of walls above ground level. The formwork panels are supported on this platform when the wall is poured in stages.

Climbing is achieved by means of cones, climbing rings and bolts placed at the position of tie rods or fixed to the plywood itself.

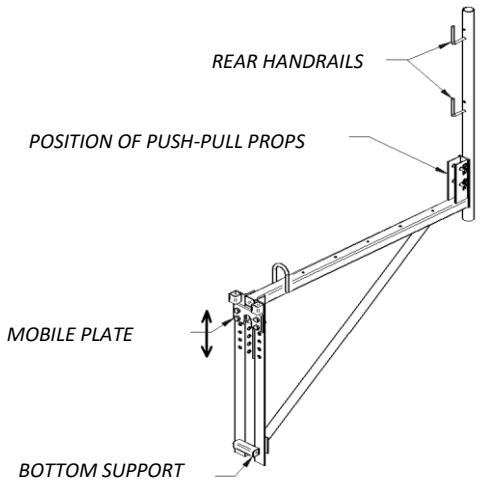

The climbing bracket is equipped with a multi-punched profile to be easily adjusted to the required height. It also provides for safety railing with wood planks.

2.2.27. CONE DW15/M24

This is the tie for the climbing bracket and is also used with the CLIMBING RING NT15.

When the material embedded in the concrete is going to be lost, the TIE ROD DW15 and the STANDARD ANCHORAGE are used.

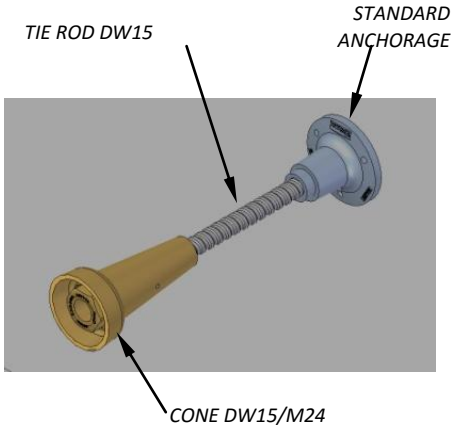

It is a part that is recovered from the executed wall and for this purpose, it has a hexagonal head with 36mm between faces.

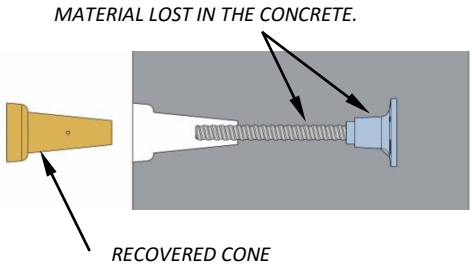

2.2.28. CLIMBING RING NT15

Item on which the climbing bracket is supported. It is fixed to the cone DW15/M24 with hexagonal bolt M24x120 DIN931-10.9.

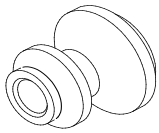

2.2.29. CONE-WALER TIE 90

This part is used to tie the CONE DW15/M24 to the BIRAMAX panel by means of the holes provided for the TIE RODS.

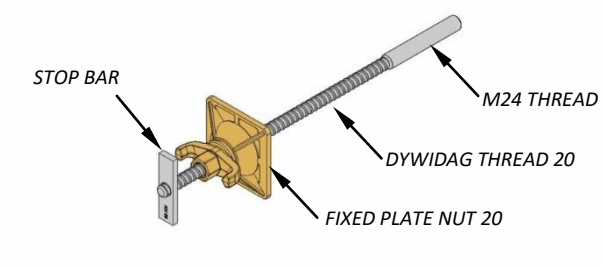

This is a rod with M24 threads at one end and Dywidag threads on the rest, on which a fixed plate slides. It also has a welded plate at the other end that acts as an abutment.

2.2.30. CONE AWF

This type of cone has a DW15 thread on its narrow side and a M24 thread on the other. The threads are terminated by a flexible cotter pin.

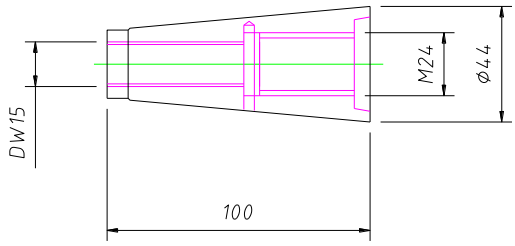

2.2.31. AWF CLIMBING RING

This is the component on which the climbing brackets rest, it is fitted on the cone AWF at its wide point and secured using an M24 bolt.

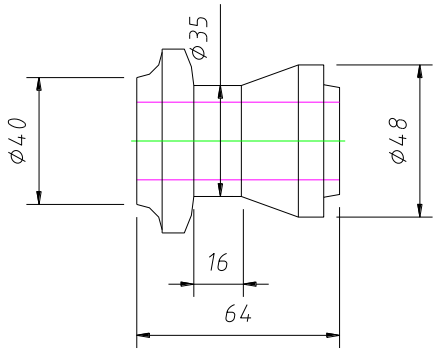

2.2.32. TIE ROD

This item is used for the joining of two panels face-to-face. It is capable of withstanding the pressure of the concrete exerted onto the panels.

The tie rods are inserted into the tie holes of the panels through a spacer tube and fastened with nuts.

PERMISSIBLE WORKING LOAD OF THE TIE ROD 15: 90 kN

There are various lengths available depending on the wall thickness.

ITEM NO.	ITEM NAME	WEIGHT	
0230100	TIE ROD 15/1	1.7	
0230120	TIE ROD 15/1.2	2	
0230150	TIE ROD 15/1.5	2.2	
0230200	TIE ROD 15/2	3.3	
0230600	TIE ROD 15/6	8.6	

2.2.33. ECCENTRIC PLATE

It is a 150x110x12 mm plate with two Ø20mm holes, one centred and the other not-centred.

It is used with the hexagonal nut 15 instead of plate washer nut 15 for the tying of

panels in horizontal position. As it is impossible to use the plate washer nut for the lower ties, the eccentric plate is used with the tie rod through the not-centred hole.

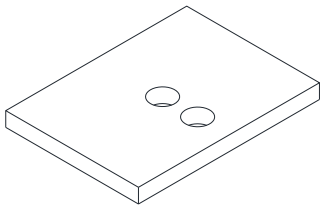

2.2.34. PLATE WASHER NUT 15

It is a 120x120 mm washer nut with a free-rotating captive wing nut for the insertion of any Ø 15 mm tie rod or pin. As the tie rod, it is part of the form tie system of the panels (the outside dimension of the nut is capable of holding two adjacent panels).

Its shape eases the use for straight or inclined wall formwork up to an inclination of 15°.

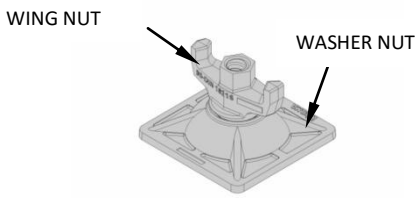

PERMISSIBLE WORKING LOAD

PLATE WASHER NUT 15:90 kN

2.2.35. PLATE NUT D15 200X150

This is a tying element used together with the Ø 15mm TIE RODS.

It is used instead of the PLATE WASHER NUT 15 in those cases where the tie rods pass through 50-100 mm wide filler.

SAFE WORKING LOAD PLATE NUT 200X150X10: 90 kN

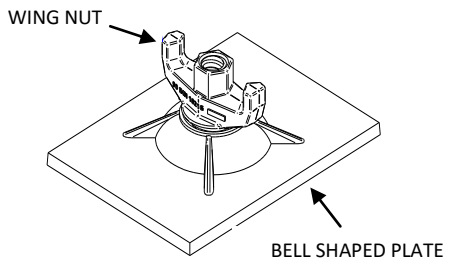

2.2.36. ML BULKHEAD HOOK

The ML Bulkhead Hook can be attached to the lateral holes of the panels or to the outside of the profile offering numerous positions for its placing. It is used for several purposes:

- In columns: for the connection of universal panels with plate washer nut
- In wall stop-ends: for the connection of walers with plate washer nut

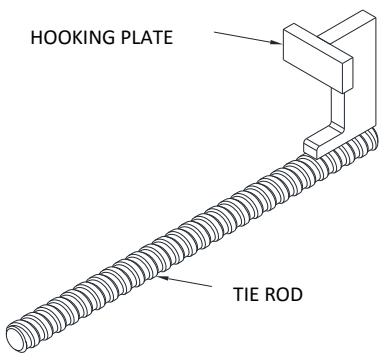

2.2.37. SPACER TUBE 22/25

Plastic tube used as sleeve for the 15 mm tie rods in order to comfortably remove them from the hardened concrete wall.

Cut to an exact length, it is also used to maintain the thickness of the component to be formed.

It is a lost item.

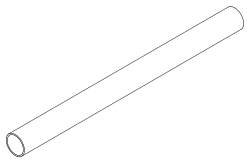

2.2.38. CONE 22

Cone or funnel shaped plastic item used as end fitting of the Spacer Tube 22/25 (placed on both sides of the tube).

It is an easily recovered reusable item.

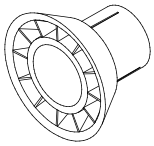

2.2.39. PLUG 20

It is placed over the hole of the END CONE 22 once the wall has been stripped.

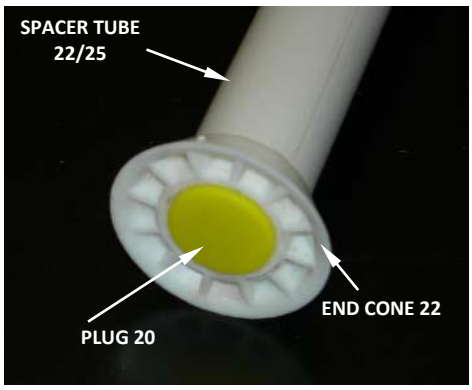

2.2.40. SPACER TUBE 22/26

Plastic tube used as sleeve for the tie rods. Along with the Water Stop Cap 26, it is used to waterproof the concrete wall.

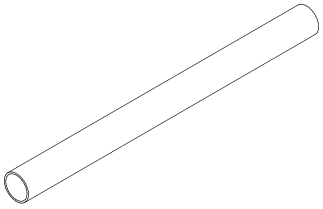

2.2.41. WATER STOP CAP 26

It is a plastic piece with cylindrical rings that prevents leaking. Along with the Plastic Plug 26 and the Spacer Tube 22/26, it is used to waterproof the tie holes.

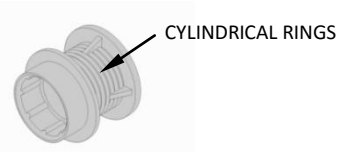

2.2.42. WATER STOP CAP PLUG

This plastic element is used to plug the WATER STOP CAP 26 to solve the water stop condition in wall forming. It is placed after the formwork has been stripped.

2.2.43. WATER STOP DW15

Cast iron part placed in the middle of the wall and connected at both ends with tie rods to create a barrier against possible penetration of liquids inside the built wall.

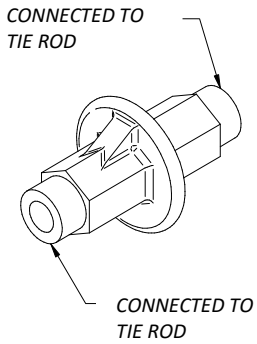

2.2.44. WATER STOP ADAPTER DW15

Plastic item used with the Water Stop DW15 for its connection to the standard Spacer Tube 22/25 that protects the form ties.

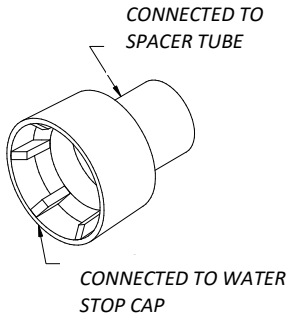

2.2.45. CHAMFER STRIP LGR

The chamfer strip is a plastic item for columns with chamfered corners. Its shape perfectly fits the panel and does not need to be fastened with any additional item.

It is 3 m long and has a chamfered end of 20x20 mm.

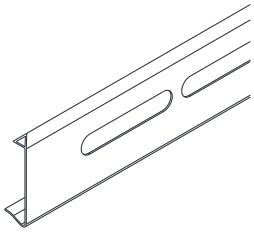

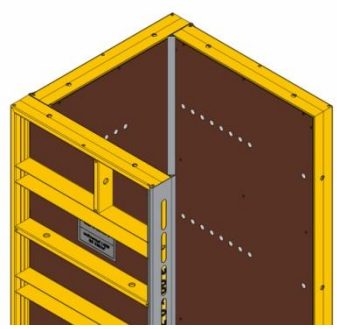

3. Assembly, Use and Dismantling

In this section, the assembly steps and system components for a standard LGW assembly are explained in detail. Two assembly modes - manual and with crane - are distinguished.

3.1. MANUAL ASSEMBLY

STEP	DESCRIPTION	SCHEMA
1	Move the panels to the assembly area. Position the panels face-to-face and join them with tie rods and plate washer nuts. Place the adjacent panel and join it to the first with clamps.	
2	Place walers, push-pull props and push-pull prop heads. Anchor the formwork base to the ground with Hilti HSA M20x125.	
3	After having finished the entire formwork row on one side, the panel placed face-to-face to the first one can be removed to ease the installation of the steel reinforcement.	

4	Erect the opposite row of formwork by inserting the tie rods, placing the plate washer nuts and joining the panels with clamps and walers.	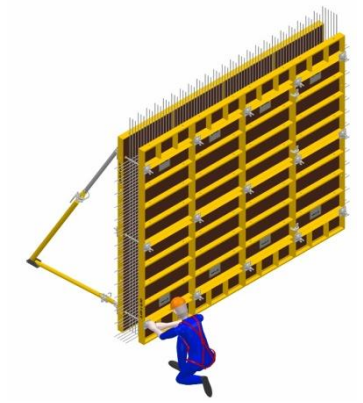
5	Use statutory auxiliary lifting means to access the upper part of one side of the formwork and place the post brackets and handrail posts. Install the upper and lower handrails and toeboards with wood planks.	
6	Place walkway brackets on the upper part of the opposite side of the formwork. Deck the working platform and place handrails and toeboards.	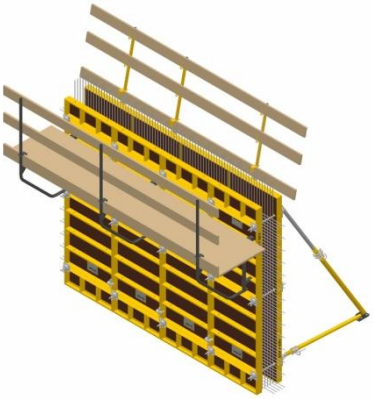

7	Access the working platform from a statutory auxiliary means and proceed with concrete pouring.	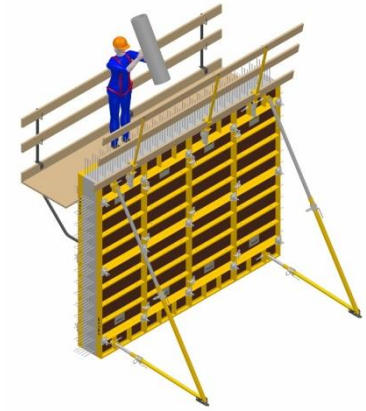
8	After complete concrete hardening, proceed with dismantling. Remove the working platforms and handrails from the formwork top of both sides from a statutory auxiliary means. Dismantle the panels of the side without push-pull props by removing clamps, walers and plate washer nuts. Likewise, dismantle the panels of the side with push-pull props. Proceed with general maintenance and cleaning of the panels.	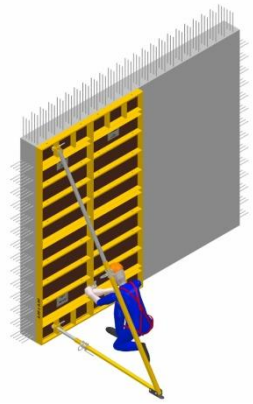

3.2. ASSEMBLY WITH CRANE

STEP	DESCRIPTION	SCHEMA
1	After preparation of the pre-assembly area, place planks for the support of the formwork to be assembled. Lay the panels on the mudsills with statutory lifting hooks and crane. Join the panels with clamps.	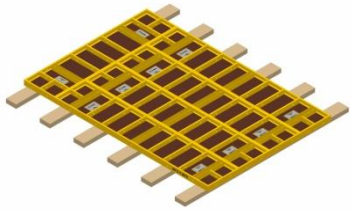
2	Assemble the push-pull prop with heads and shoes for the stabilisation of the panels.	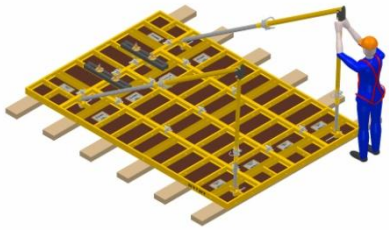

3	Fit the panels with post brackets. Insert the handrail posts and make the upper and lower protective railing with planks.	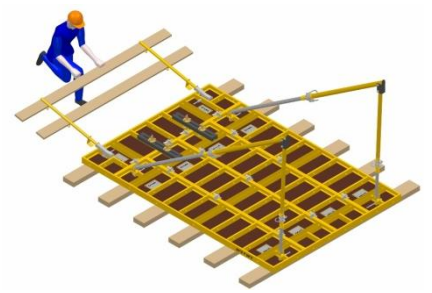
4	Fit the panels with certified auxiliary lifting means. Lift the panels and move them to the site of operation. Anchor the formwork base to the ground with Hilti HSA M20x125.	
5	Assemble another set of panels in the pre-assembly area by repeating step 1, and install the walkway brackets according to the assembly drawings.	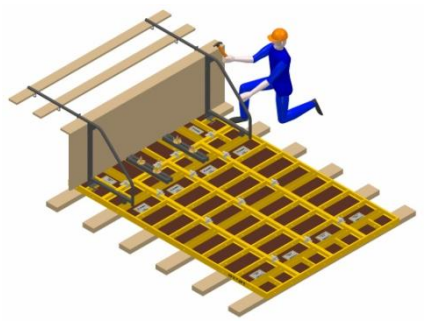
6	Lift the assembly and place it parallel to the set of panels with push-pull props. Insert the tie rods and fix with plate washer nuts to join the panels. Remove the lifting hooks. These operations are carried out with statutory auxiliary means.	

7	Access the working platform from a statutory auxiliary means and proceed with concrete pouring.	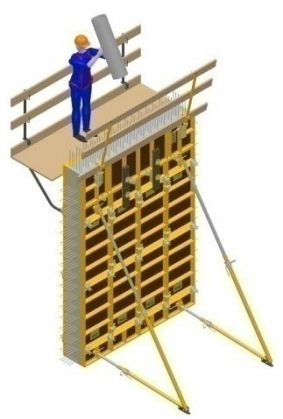
8	After complete concrete hardening, proceed with dismantling. Access the pouring platform and sling the panels to the lifting hooks. Afterwards, remove the plate washer nuts and tie rods from the panels for stripping. Take the panels off and lay them down to remove the connecting clamps and walkway brackets (if the formwork gang is not going to be used anymore). In any case, proceed with general maintenance and cleaning of the panels.	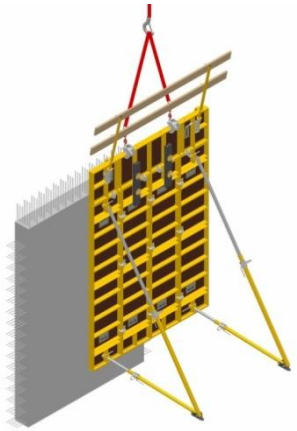

It is recommended to read and follow the technical assembly instructions for the erection, dismantling and handling of the LGW system.

- TECHNICAL ASSEMBLY INSTRUCTIONS LW01-00 FOR LGW WALL FORMWORK USING A CRANE
- TECHNICAL ASSEMBLY INSTRUCTIONS LW02-00 FOR LGW WALL STRIPPING USING A CRANE
- TECHNICAL ASSEMBLY INSTRUCTIONS LW03-00 FOR LGW COLUMN FORMWORK USING A CRANE
- TECHNICAL ASSEMBLY INSTRUCTIONS LW04-00 FOR LGW COLUMN STRIPPING USING A CRANE
- TECHNICAL ASSEMBLY INSTRUCTIONS LW05-00 FOR MANUAL LGW WALL FORMWORK
- TECHNICAL DISMANTLING INSTRUCTIONS LW06-00 FOR MANUAL LGW WALL STRIPPING
- TECHNICAL ASSEMBLY INSTRUCTIONS LW07-00 FOR MANUAL LGW COLUMN FORMWORK
- TECHNICAL DISMANTLING INSTRUCTIONS LW08-00 FOR MANUAL LGW COLUMN STRIPPING

3.3. PUSH-PULL PROPS

The push-pull props are used for the initial positioning of the panel gangs of the first form face.

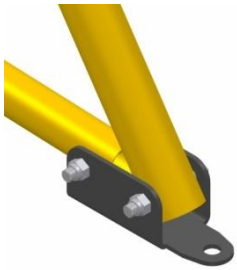

They enable the placing and plumbing of the panel gangs in the right position, and in addition withstand the eventual loading during assembly.

The push-pull props are anchored to the ground through the holes. Hilti HSA M20X125 ($F_{tensile}$= 23.8 kN) are recommended for concrete without cracks (always follow manufacturer instructions).

The push-pull props are attached to the panels with prop heads through the holes in the panel ribs.

HORIZONTAL RIB

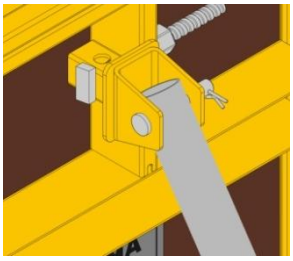

VERTICAL RIB

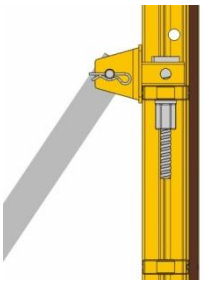

FIXING DETAIL

Formwork height	Light Push-Pull Prop 1.55-2.5	Light Push-Pull Prop 2.5-3.85	Maximum influence width	
1.2 m		H=1 m L=2.5 m	4.5 m	
1.5 m		H=1 m L=2.5 m	4.5 m	
1.8 m		H=1 m L=2.5 m	4.5 m	
2.4 m	H=0.3 m L=1.7m	H=2 m L=2.7m	4.5 m	
3 m	H=0.3 m L=1.7m	H=2 m L=2.7m	4.5 m	
3.3 m	H=0.5 m L=1.7m	H=2 m L=2.7m	4.5 m	
3.6 m	H=0.5 m L=1.7m	H=2 m L=2.7m	4.5 m	
3.9 m	H=0.5m L=1.7m	H=3.1m L=3.3m	4.2 m	
4.2 m	H=0.5m L=1.6m	H=3.1m L=3.4m	3.6 m	
4.8 m	H=0.5m L=1.6m	H=3.1m L=3.4m	2.7 m	
5.4m	H=0.5m L=1.6m	H=3.5m L=3.85m	1.5 m	
6m	H=0.5m L=1.6m	H=3.5m L=3.85m	1 m	

H: Height of heads L: Push-pull prop extension

3.4. POST BRACKET

The post bracket is assembled to the hole of the rib closest to the panel's top profile by inserting the pin of the post bracket into the rib and fastening it with a hexagonal nut.

It is the part that holds the Safety Handrail Post for the protective railing on the opposite side of the working platform.

For the upper and lower (toeboard) protection wood planks are used. The plank for the toeboard should have at least 150x30 mm for a maximum distance between heads of 2 m.

These handrail posts have pins and cotter pins attached to them for the fastening to the post bracket.

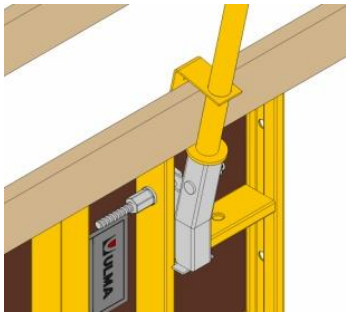

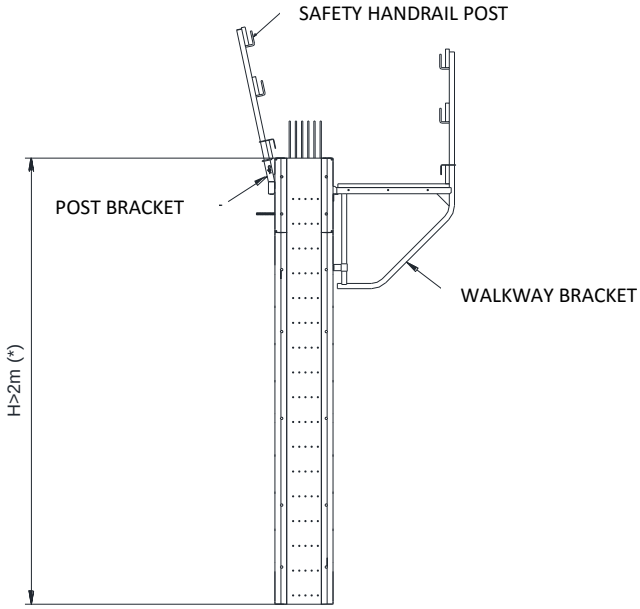

(*) Note: This dimension depends on the national legislation of each country.

3.5. LIFTING HOOK

This is an auxiliary item for the lifting of panels or panel gangs by crane. It has a **maximum load-bearing capacity** of **1200 kg** with a maximum angle of 60° between the slings or **30° with regard to the vertical**.

As a general rule, two brackets are used per panel or gang.

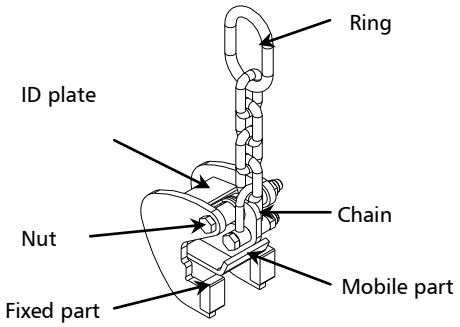

The Lifting Hook carries the CE marking, and so it complies with the European Union Machinery Directive 98/37/EC.

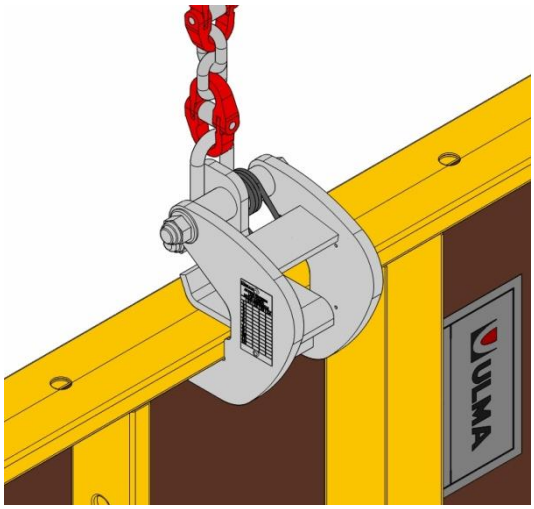

3.5.1. Basic assembly

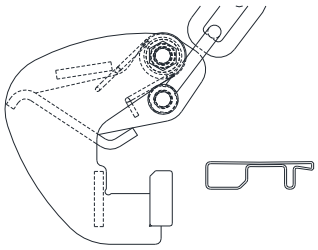

The basic assembly process can be split into three phases:

Opening the hook

Hold the fixed part of the hook with one hand and turn the mobile part with the other

Placing the hook

Hook the hook into the panel's top profile the way that the claws of the hook engage into it.

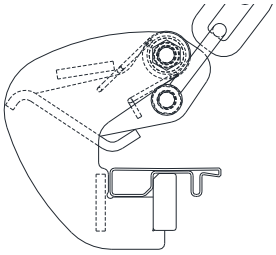

Fixing the hook

Let go of the mobile part ensuring that the hook is well engaged on both sides of the profile.

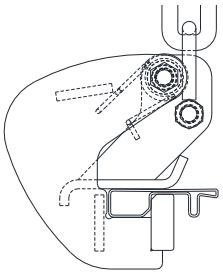

Place the hook preferably onto a panel rib to prevent it from laterally sliding during lifting. Attach the sling of the crane to the chain shackle of the lifting hook observing the maximum angle of **30° with regard to the vertical**.

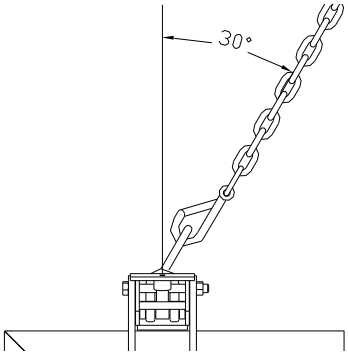

3.5.2. Basic dismantling

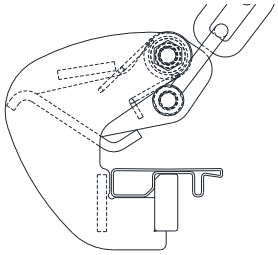

Opening the hook

Hold the fixed part of the hook with one hand and turn the mobile part with the other.

Removing the hook

Disengage the hook from the outside profile of the panel.

For more information, see the Conditions of Use of the Lifting Hook.

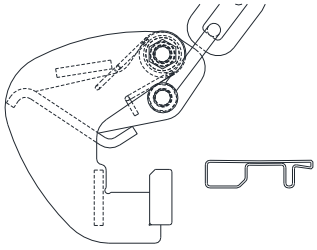

3.6. WALKWAY BRACKET

The walkway bracket, attached to the panels, is used to make working platforms for pouring works or any other tasks to be carried out on the formwork.

The walkway brackets are placed at a maximum spacing of 2 m to ensure the proper nailing of the planks used for the decking.

Minimum dimensions are as follows:

- Planks for the handrail: 150x30 mm
- Planks for the platform: 200x30 mm

Load capacity of the walkway bracket: 150 kg/m^2. There are two assembly options depending on if the walkway brackets are fixed to the horizontal or to the vertical ribs.

3.6.1. Horizontal ribs

The walkway bracket is fixed by inserting its welded pin into the holes of the horizontal rib closest to the panel's top profile. The stopper rests on a lower rib for additional stability.

The pin has a cotter pin R attached to secure the joint of the walkway bracket to the panel and prevent problems during lifting and moving operations.

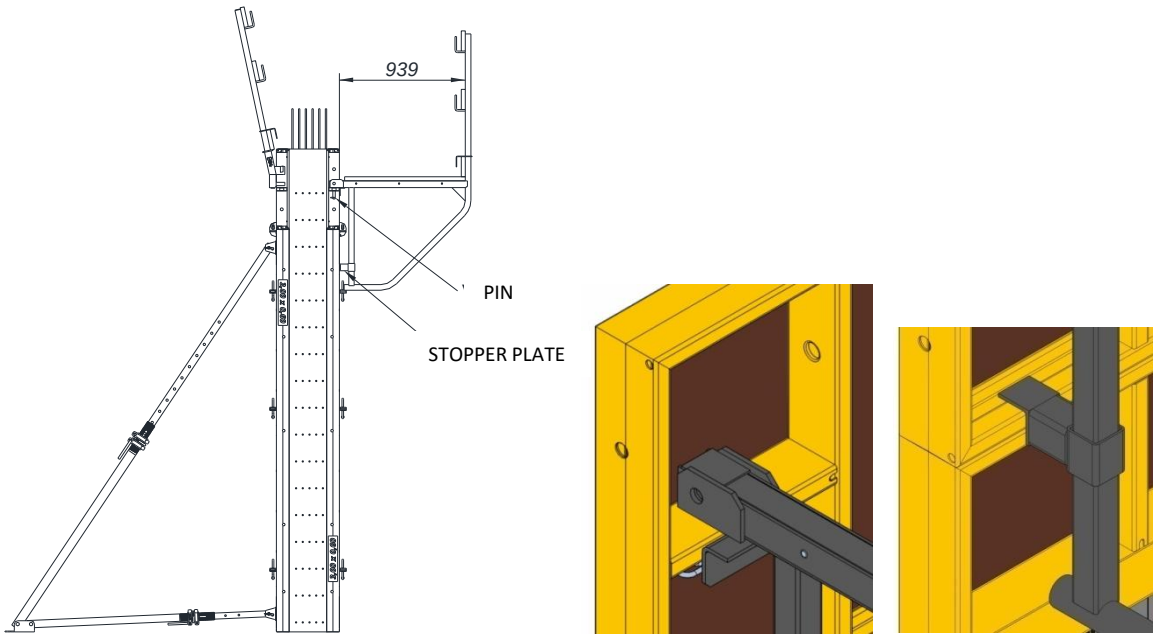

3.6.2. Vertical ribs

The walkway bracket is assembled by inserting the pin into the hole of the vertical rib closest to the panel's top profile and fastening it with panel bolt and hexagonal nut 15.

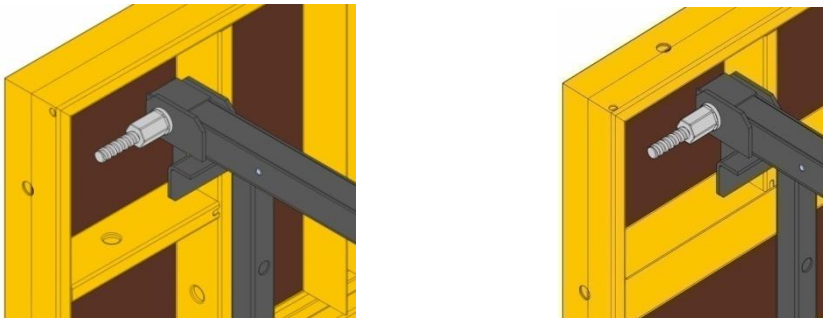

Fastening to vertical rib with PANEL BOLT+HEXAGONAL NUT

3.6.3. Basic assembly

Deck the brackets with wood planks to make the working area. Ensure the proper nailing onto the walkway brackets (so the planks do not start slipping).

Assemble the upper and intermediate handrail and toeboard to the handrail posts of the walkway brackets. The planks for the railing are the same as for the decking of the working platform. They are fixed to the L-shaped plate of the handrail posts. The plank of the toeboard rests on the planks of the working platform decking. It is recommended to use planks without knotholes and in good condition.

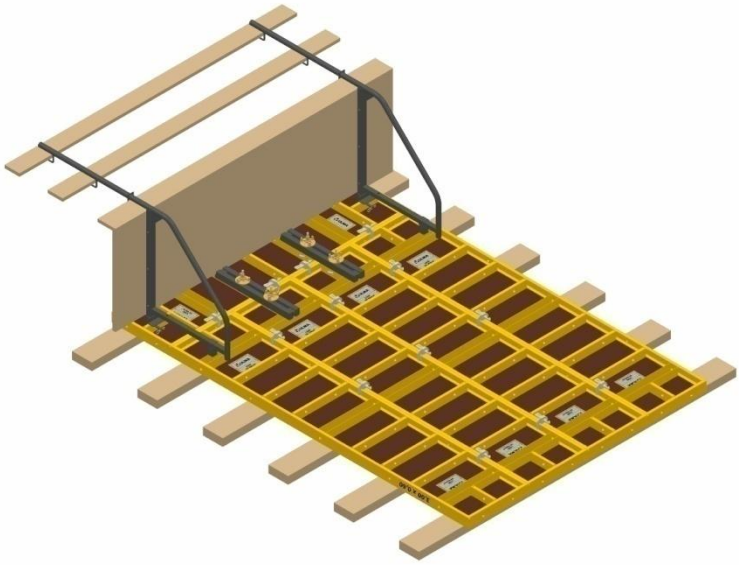

4. Solutions

Subsequently, there are different solutions for the assembly of panel gangs and for wall construction given.

- Panel gangs
  - Vertical joint
  - Horizontal joint
- Fillers between panels
  - Variable filler 0<x<5cm
  - Filler of 5cm
  - Variable filler 5<x<18cm
  - Variable filler 8<x<30cm
- Corners at 90º
  - Inside: inside corner panel
  - Outside: universal panel
- Corners not 90º
  - Angle of 70-180°
  - Angle of 115-180°
- T and X wall intersections
- Pilasters
  - In wall
  - In corner
- Wall stop-ends
  - With waler
  - With universal panel
- Column solutions
- Other solutions
  - Walls with thickness variation
  - Wall offset
- Joining walls
  - Joining to a transversal wall
  - Joining to a longitudinal wall
- Inclined walls
- Foundations
  - Open-air foundations
    - Panel on ground
    - Panel on mudsills
  - Foundations in trenches
- Waterproofing
  - Water stop system 26
  - Water stop system DW15
- Climbing
  - Cone on tie rod level
  - Cone on plywood
- Silgle- Sided Wall Formwork

4.1. PANEL GANGS

The main advantage of the assembly of panel gangs with clamps is that of a high assembly speed. This is due to the fact that after having positioned the clamps, they only need a hammer blow to fasten the panels.
Another important quality of this type of connection is that the panel position can be adjusted to the changing ground level. This is possible because the clamps can be placed along the entire length of the panel's perimeter profile.

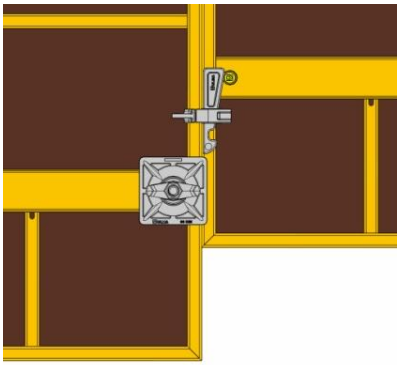

4.1.1. Vertical joining of panels

Vertical joints can be fastened with two types of clamps (MEGALITE clamp and NEVI clamp). As a general rule, MEGALITE clamps are preferably used for joints without compensations. Three MEGALITE clamps are used for the joining of two 3 m high panels and two MEGALITE clamps for panel heights between 2.4 and 1.2 m:

- 3 m high panels:

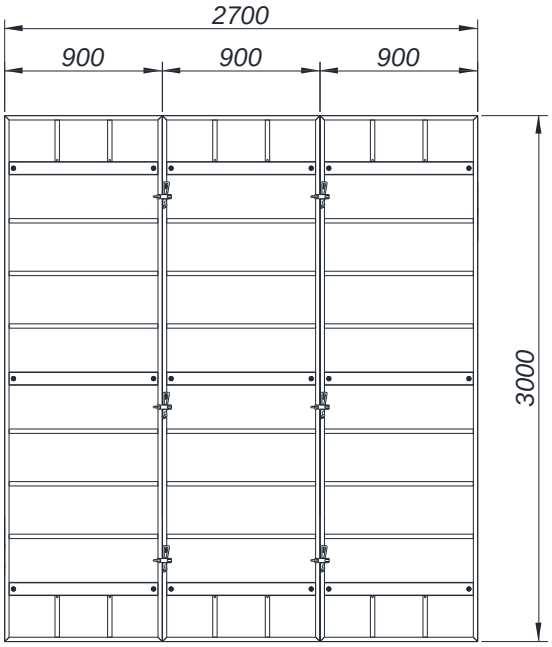

- 2.4m high panels:

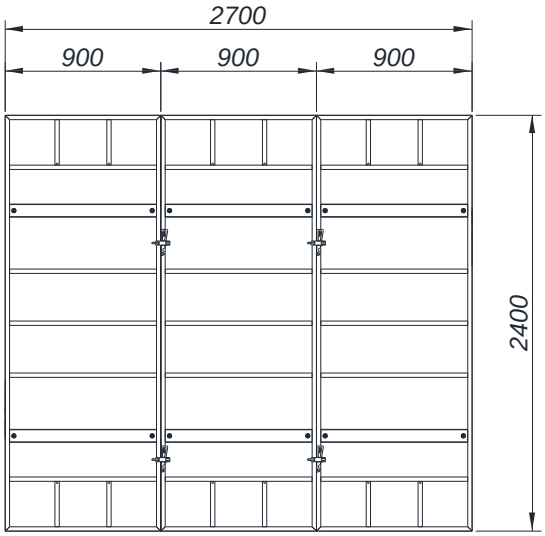

- 1.2m high panels:

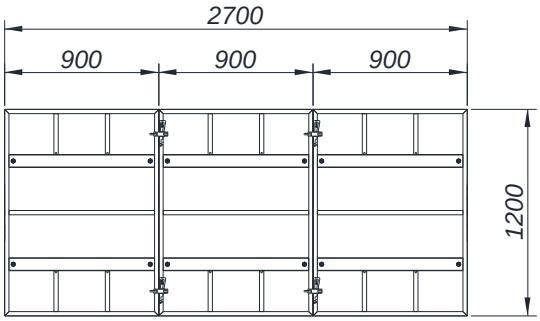

The following exceptions may be mentioned:

- Joint with wood fillers or compensation tube between panels. In this case, NEVI clamps are used as follows:
  - 3m panel: 3 NEVI clamps
  - 2.4m panel: 3 NEVI clamps
  - 1.2m panel: 2 NEVI clamps

- Outside corner joints at 90° with Outside Corner Panel:
  - OUTSIDE CORNER PANEL 3: 5 MEGALITE clamps
  - OUTSIDE CORNER PANEL 2.4: 4 MEGALITE clamps
  - OUTSIDE CORNER PANEL 1.2: 2 MEGALITE clamps

- Outside corner joints not 90° with Hinged Corner Panel:
  - 3m panel: 5 MEGALITE clamps
  - 2.4m panel: 4 MEGALITE clamps
  - 1.2m panel: 2 MEGALITE clamps

  Whenever there is a compensation required between panels, it is fixed with NEVI clamps and the joint is reinforced with 2 walers on each side of the panel.

- The adjacent joints of the following cases are reinforced with one more clamp:
  - Outside corner joints at 90° and not 90°
  - Wall stop-ends (with waler or universal panel)
- When in a panel gang, with 0.9 width panels in vertical position, the number of panels is more than 3, it is recommended to reinforce the gang with WALERs.

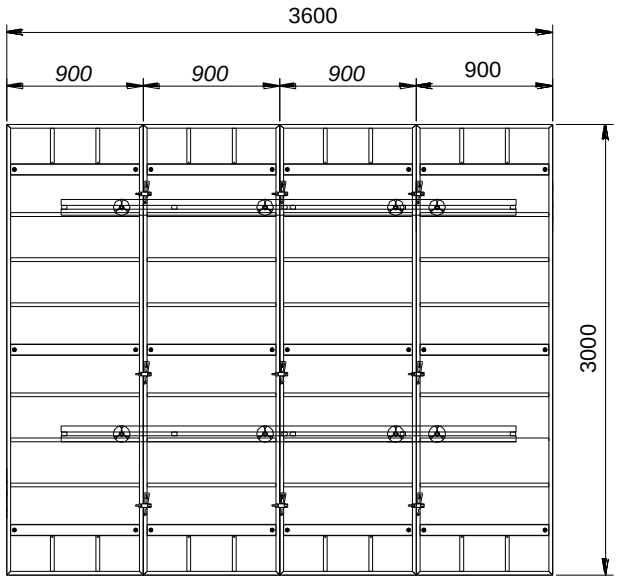

4.1.2. Horizontal joining of panels

Horizontal joints are those between panels put on top of other panels. Depending on the panels put on top of each other, clamps only are used, or clamps in combination with walers. Although horizontal joints can be fastened with both clamp types (MEGALITE and NEVI), as a general rule MEGALITE clamps are used.

Regarding the walers, the 0.75 m and the 1.6 m walers are tied to the panels with 2 hooks and plate nuts 15 through the holes of the ribs. The 3 m waler is used with 4 hooks instead of 2.

Several examples of panel combinations for different heights with both NEVI and MEGALITE clamps are shown below.

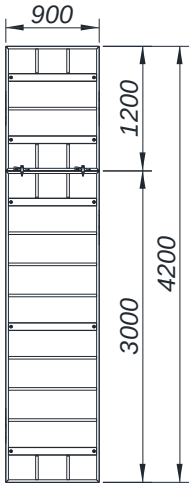
900
1200
3000
4200

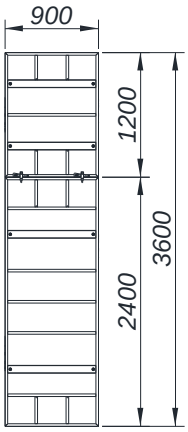
900
1200
2400
3600

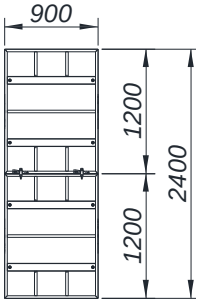
900
1200
1200
2400

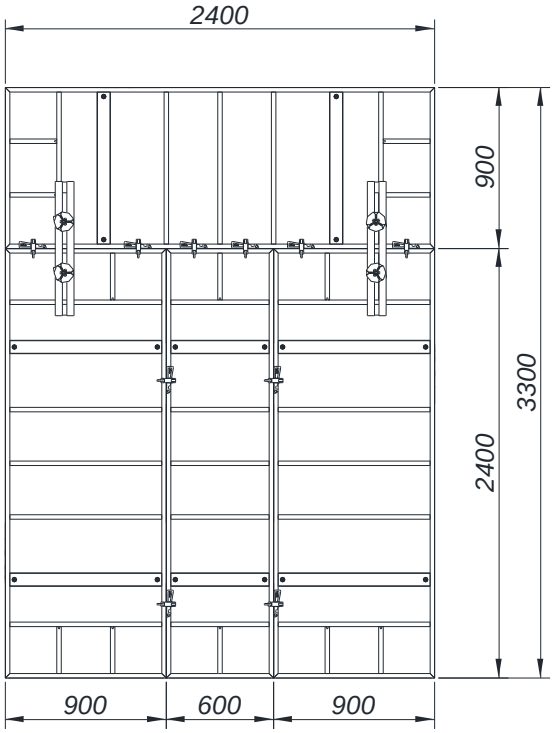
2400
900
2400
3300
900
600
900

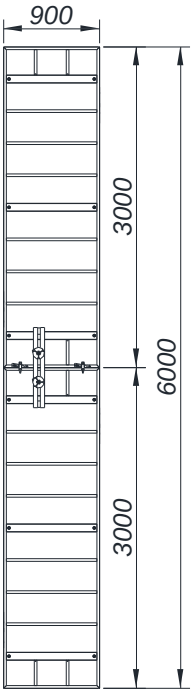
900
3000
6000
3000

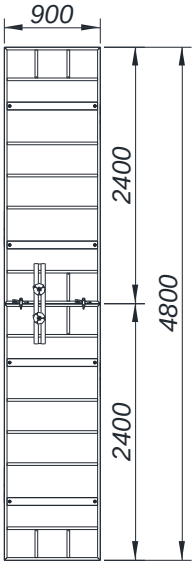
900
2400
4800
2400

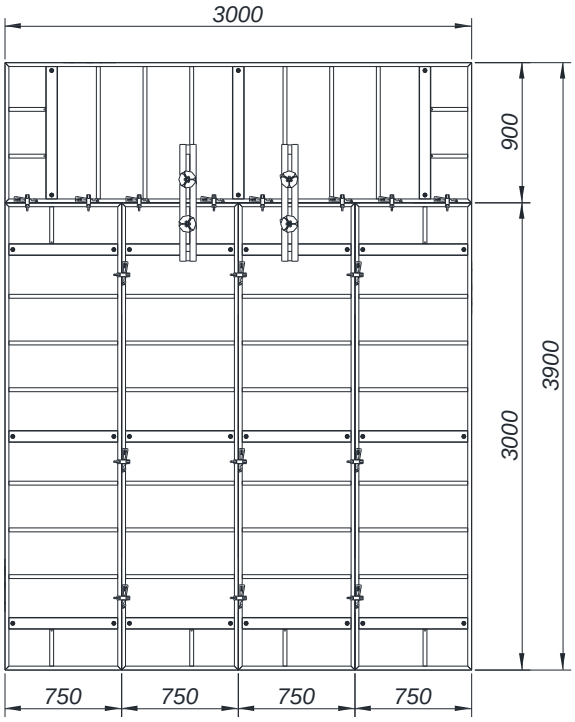
3000
900
3900
3000
750
750
750
750

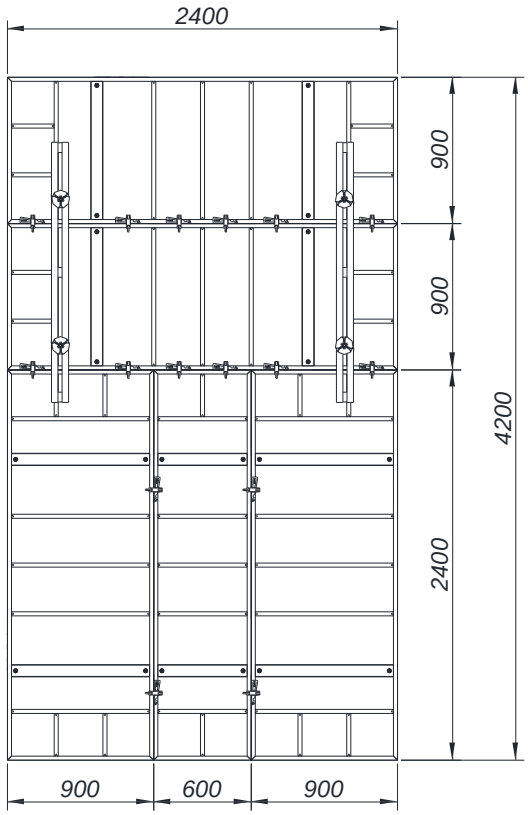

4.2. FILLER BETWEEN PANELS

It is often necessary to use fillers between panels to obtain the required wall length. The following examples of filler solutions are given depending on the size of the required filler.

4.2.1. Filler of 0<x<10 cm

Any requirement for fillers smaller than 10 cm can be solved in the following ways:

- ***Tie rod through filler + plate washer nut***

The tie rods are passed through the wood filler or compensation tube and fastened with a plate nut D15 that also holds panels and filler in place. The joint is fastened with NEVI clamps.

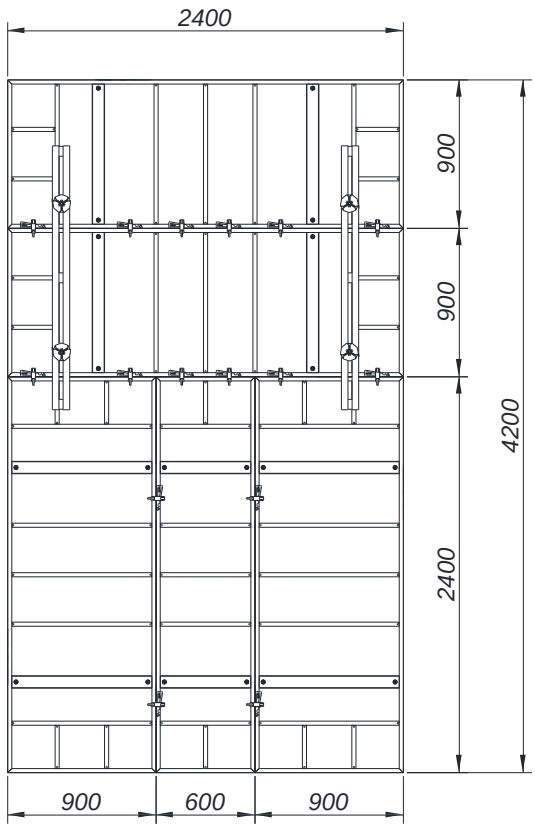

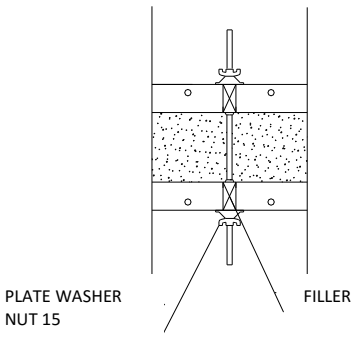

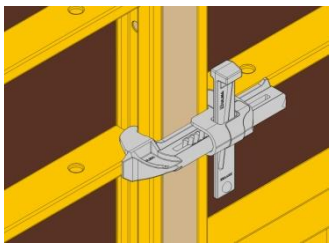

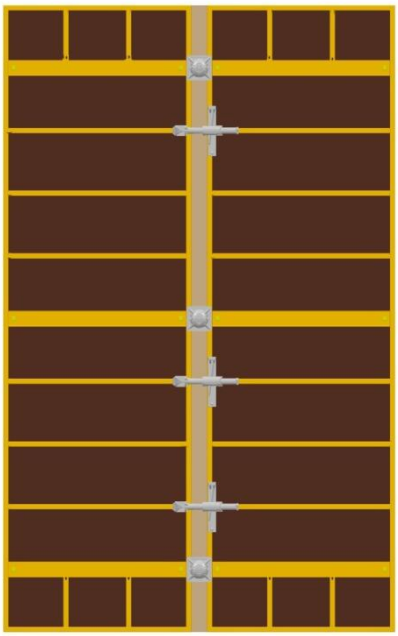

- ***Tie rod through panel + waler***

The tie rods are passed through the tie holes and walers that rest on the panel ribs to stiffen the connection. The joint is fastened with NEVI clamps.

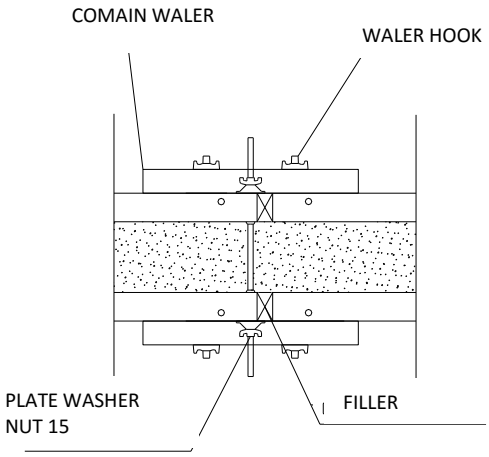

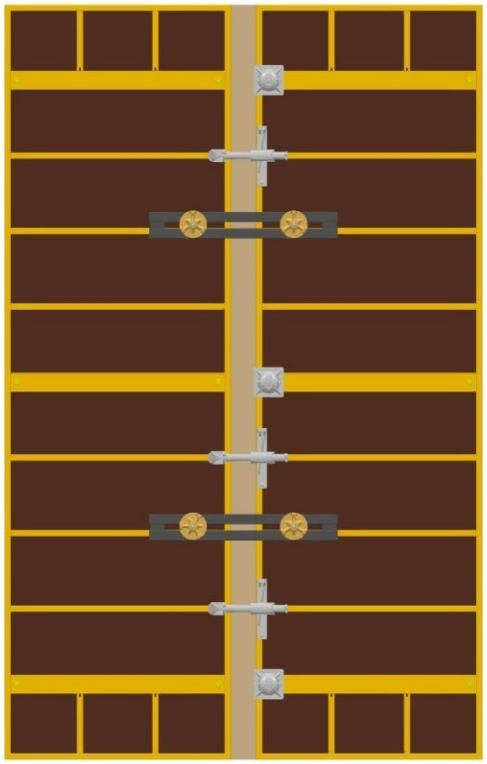

- ***Plate nut D15 200x150 (filler size < 5 cm)***

The tie rods are passed through the panel holes and the filler is hold in place with the plate nut D15 200x150. The joint is fastened with NEVI clamps. This solution is for filler sizes below 5 cm.

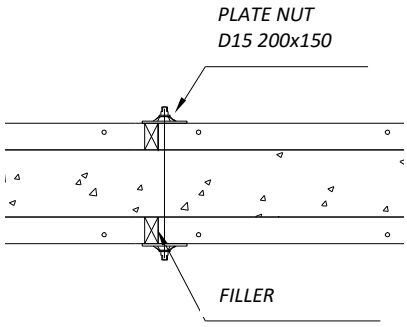

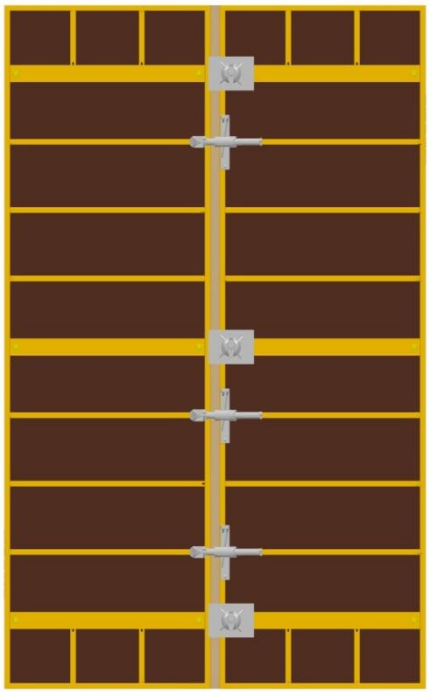

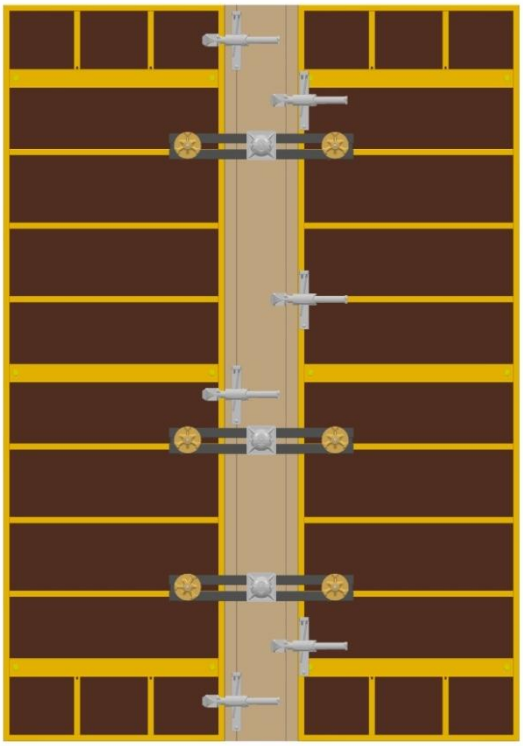

4.2.2. Filler above 10 cm

- ***With wood filler***

Any requirement for fillers bigger than 10 cm can also be solved with wood.

A wooden filler panel with the required dimensions is made and laterally reinforced with wooden blocks joined to the panels with clamps. Tie rods can be passed through the middle of the wood panel and through walers to withstand the concrete pressure.

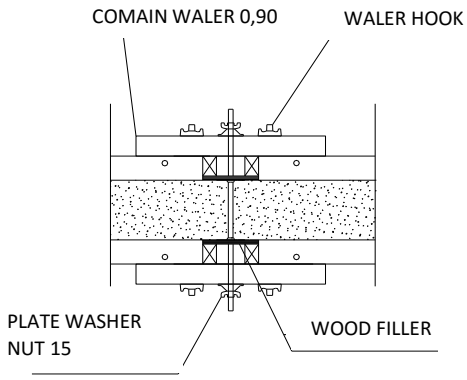

- ***With compensation plate***

Compensations from 5 to 30 cm can also be solved with the compensation plate on both sides of the wall, always in vertical position.

The exact dimensions of the compensation is obtained by overlapping one of the panels over the shuttering sheet (in case of using the compensation profile) or by connecting the panels on both sides to the shuttering sheet (in case of using the compensation plate).

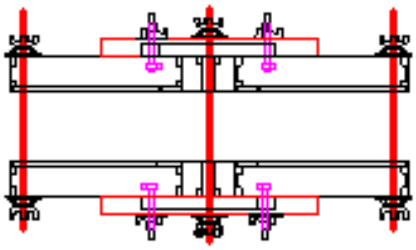

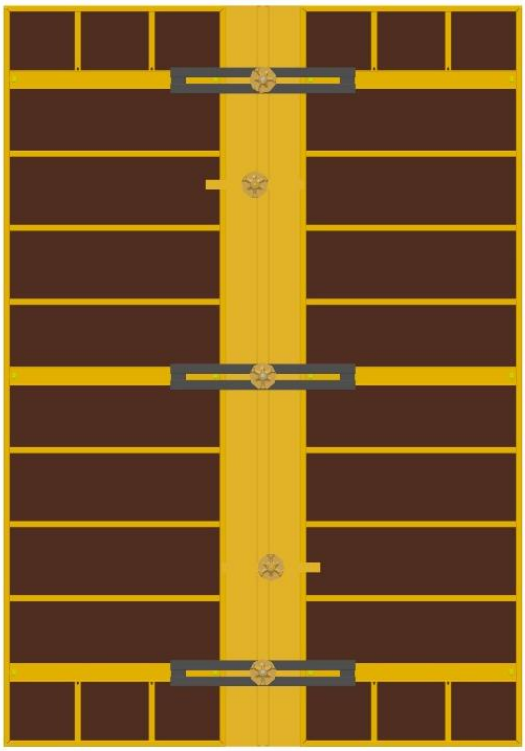

4.3. CORNERS AT 90º

4.3.1. Inside: Inside Corner Panel

The inside of 90° corners are formed with the Inside Corner Panel. The joints between the different elements are fastened with MEGALITE clamps.

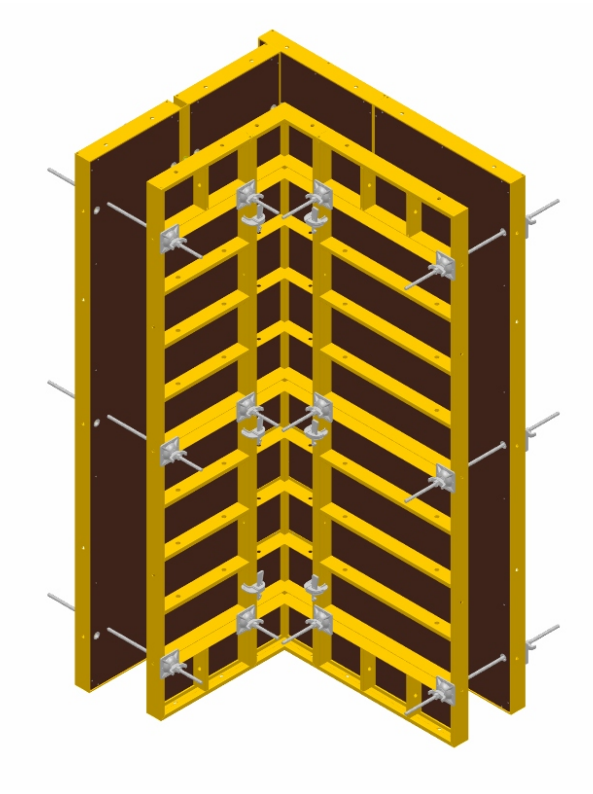

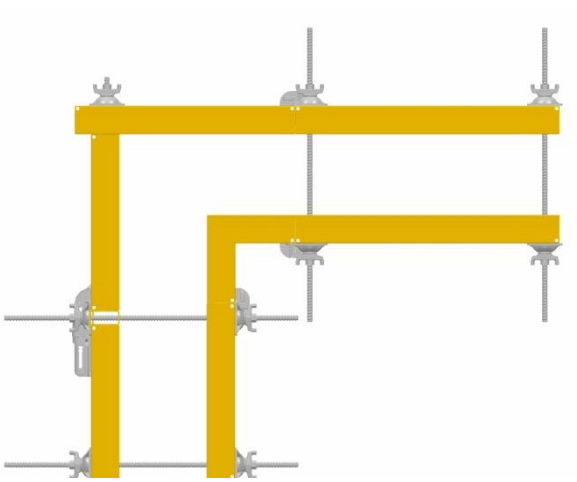

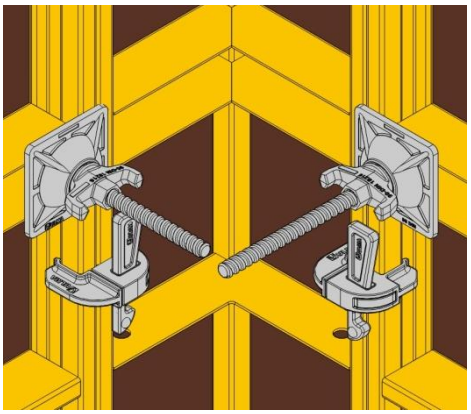

The connection of inside corner panels put on top of each other is always fastened with MEGALITE clamps as shown in the figure below:

4.3.2. Outside: Outside Corner Panel

The outside of 90° corners are formed with the Outside Corner Panel that is joined to the panels on both sides with clamps. The number of clamps necessary depends on the panel height:

PANEL TYPE	MEGALITE CLAMP
PANEL 3 m	5
PANEL 2.4 m	4
PANEL 1.2 m	2

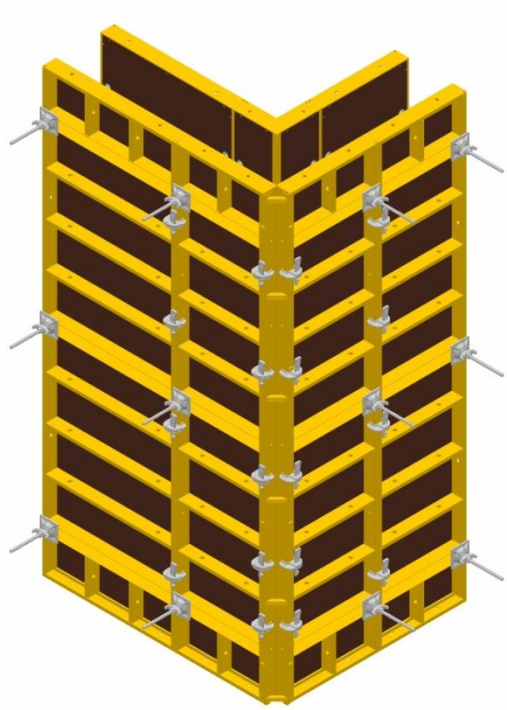

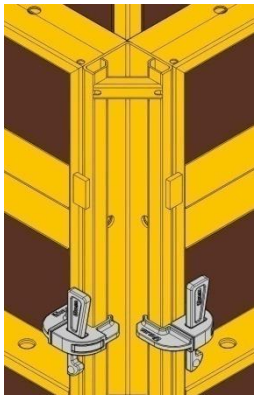

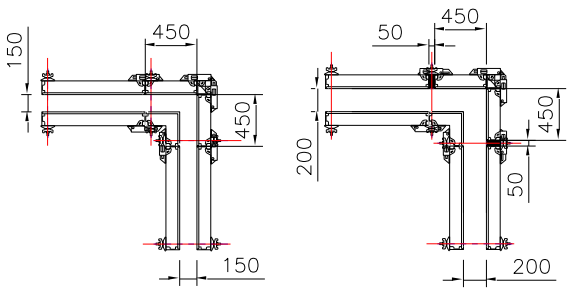

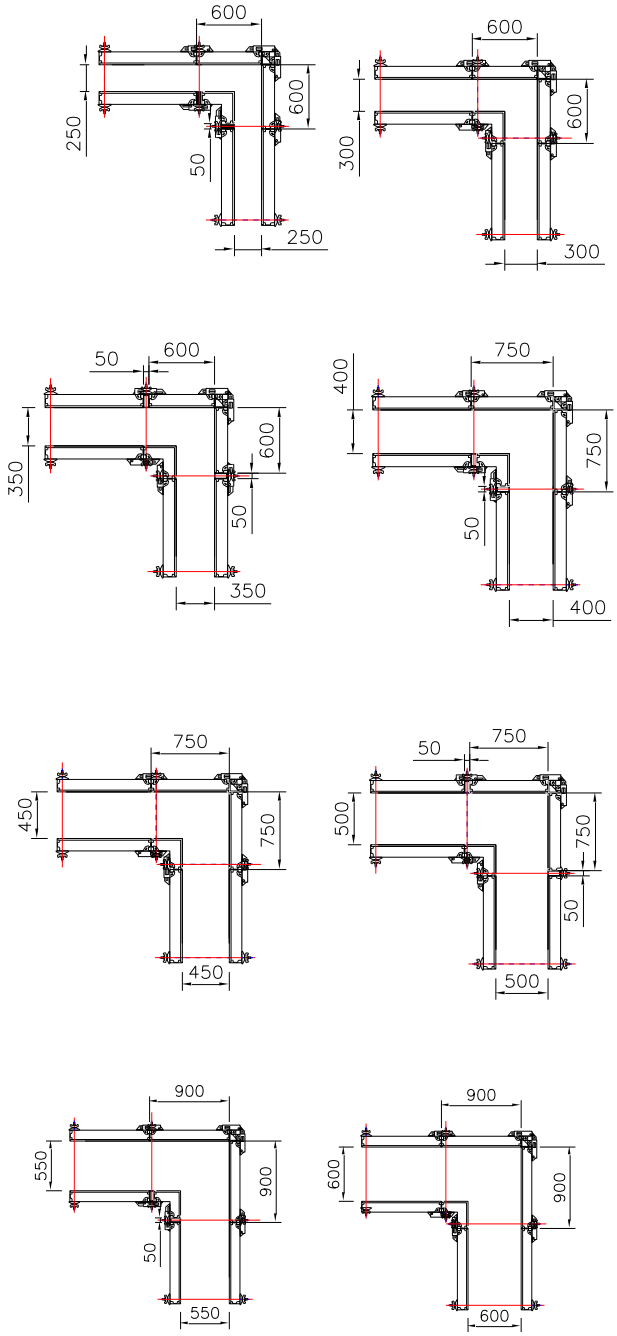

4.3.3. Outside: Universal panel

The outside of 90° corners can also be formed with universal panels. These panels have several U-shaped ribs with holes spaced each 5 cm (through these holes the Bulkhead Hooks or the Panel Bolts are passed). With the holes, the wall thickness is adjusted.

The number of ribs and holes in the panel depends on its height.

PANEL SIZE	NUMBER OF RIBS WITH HOLES
UNIVERSAL PANEL 3 m	5
UNIVERSAL PANEL 2.4 m	4
UNIVERSAL PANEL 1.2 m	2

Two configurations are common:

- A corner can be formed with a universal panel and a standard panel. The panels are joined through the holes of the multi-punched rectangular ribs of the universal panels and fastened with ML Bulkhead Hook and Plate Washer Nut 15.

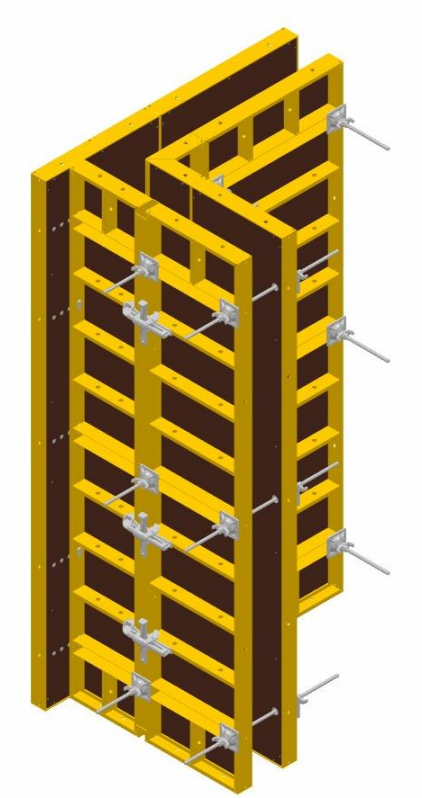

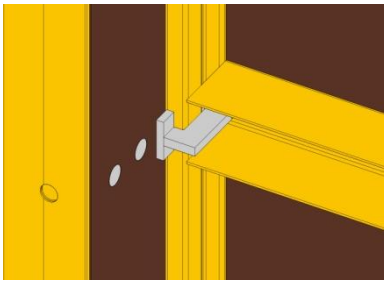

- Another solution for corners is with two universal panels. The panels are joined through the holes of the multi-punched rectangular ribs of the universal panels and fastened with ML Bulkhead Hook and Plate Washer Nut 15.

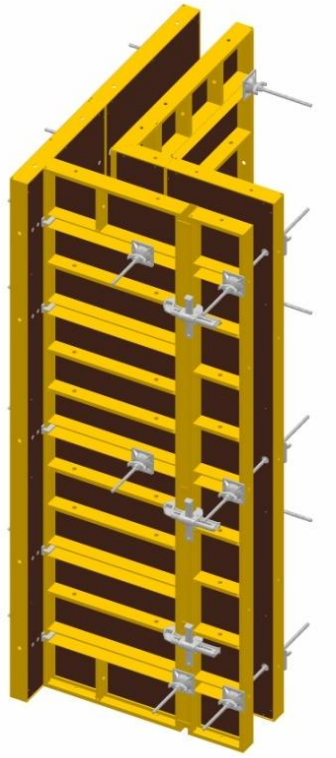

4.4. CORNERS NOT 90º

Corners not 90° are formed with the Hinged Corners (both inside and outside).

4.4.1. 70° - 180° Angle

For these cases both types of corners are used in combination. The HINGED INSIDE CORNER is used on the inside angle and the HINGED OUTSIDE CORNER placed on the outside.

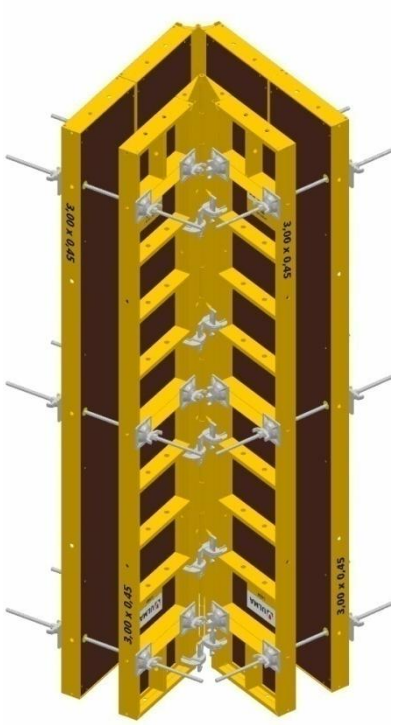

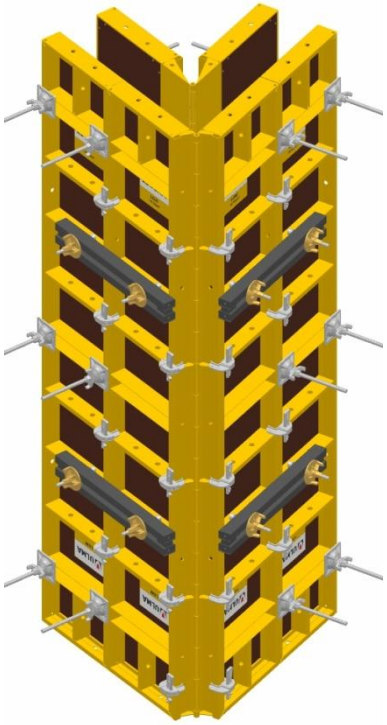

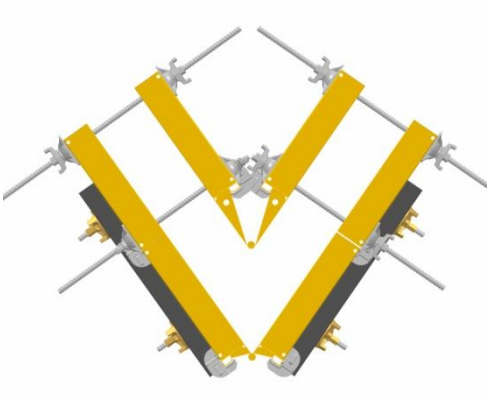

4.4.2. 115° - 180° Angle

For this range it is possible to use the HINGED INSIDE CORNERS on both wall faces as shown in the following diagram.

WALERS should still be used when there are wooden fillers in the joint, and CLAMPS alone can be used if there are no fillers.

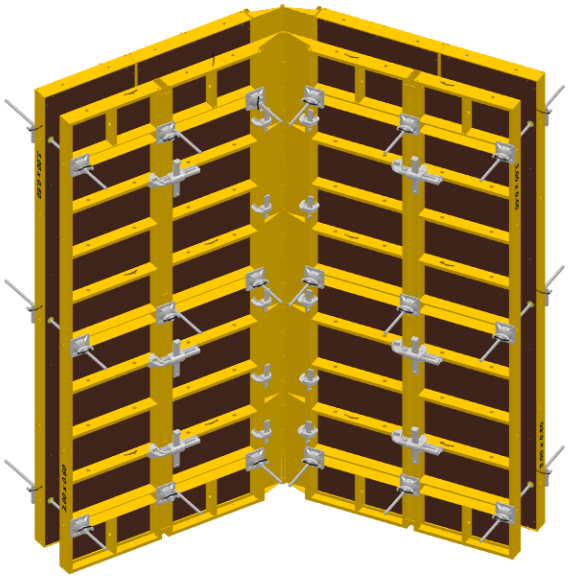

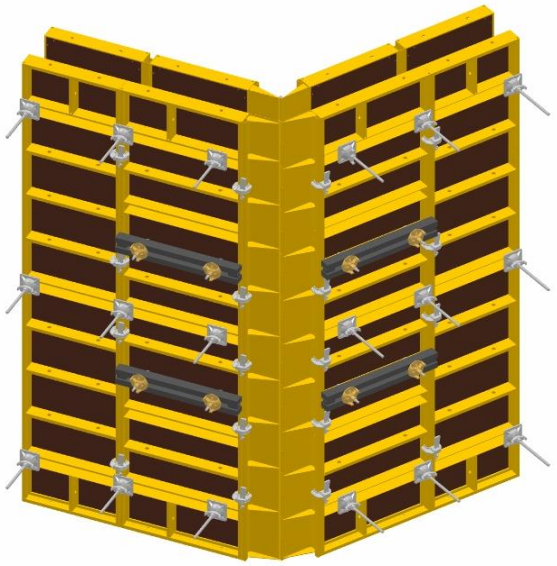

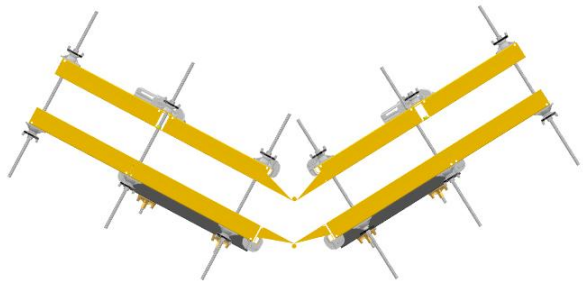

4.5. T and X WALL INTERSECTIONS

T and X-shaped intersections of walls are formed with a combination of inside corner panel and panels of different widths (different panels are used depending on the required wall thickness):

- T-shaped wall intersections

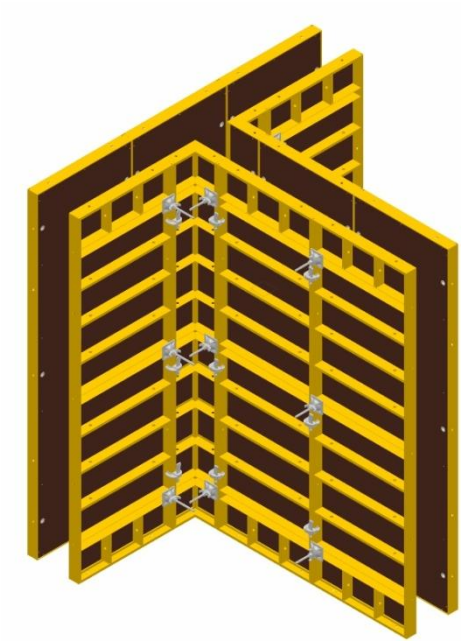

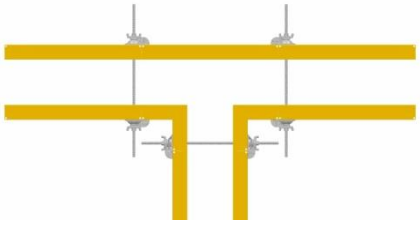

- X-shaped wall intersections

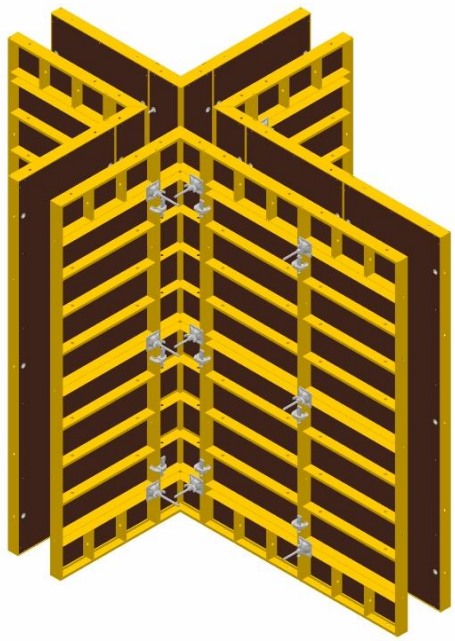

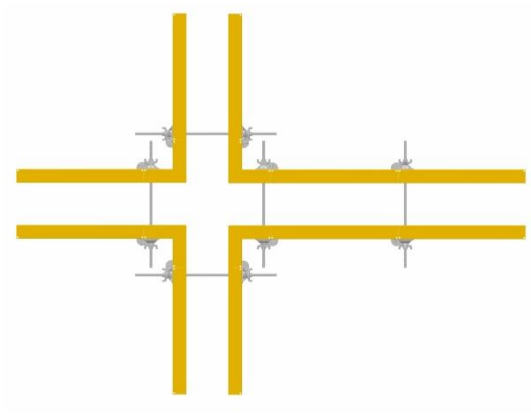

4.6. PILASTERS

Pilasters can be formed in different ways:

4.6.1. With waler

This solution uses the bulkhead hook and the plate washer nut. It suits any type of pilaster.

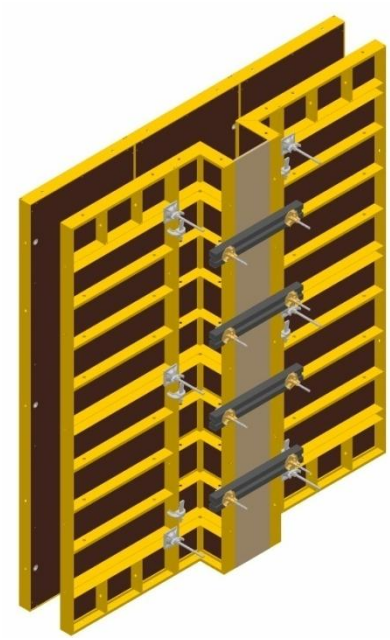

PANEL TYPE	NUMBER OF WALERS
PANEL 3 m	4
PANEL 2.4 m	3
PANEL 1.2 m	2

4.6.2. Inside corner panel with universal panel

This solution uses the panel bolt and the plate washer nut. A pilaster with a depth below 300 mm is formed with a piece of wood on the inside of the universal panel.

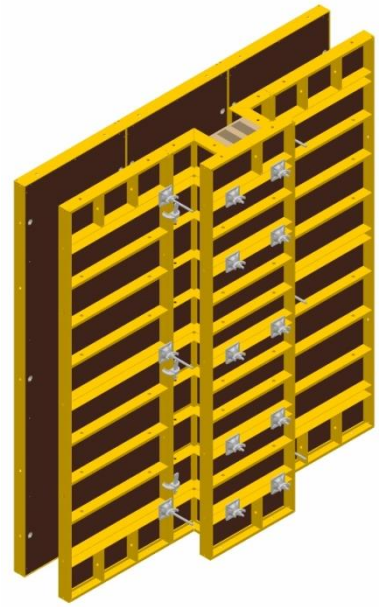

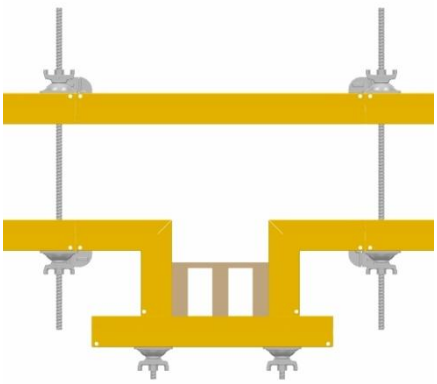

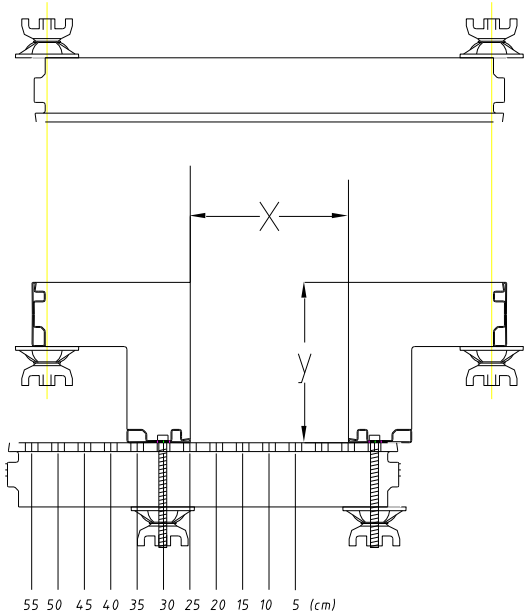

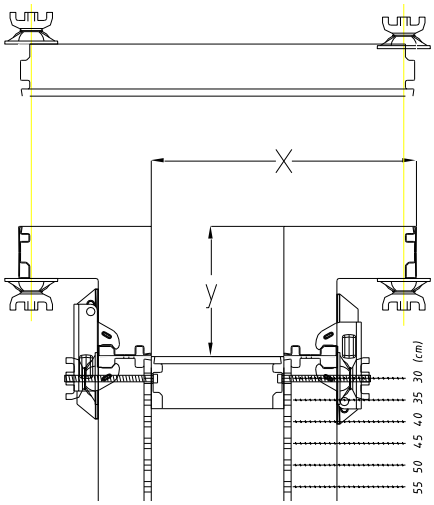

4.6.3. Universal panel with standard panels

A pilaster with a depth above 300 mm is formed with inside corner panel, universal panel and standard panel in the middle.

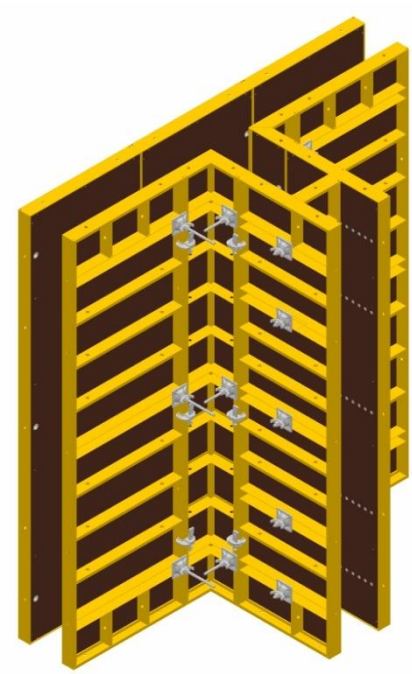

4.7. WALL STOP-ENDS

Wall stop-ends or bulkheads can be formed in different ways:

4.7.1. With waler

The walers are fixed to the panels with ML Bulkhead Hook and Plate Nut 15.

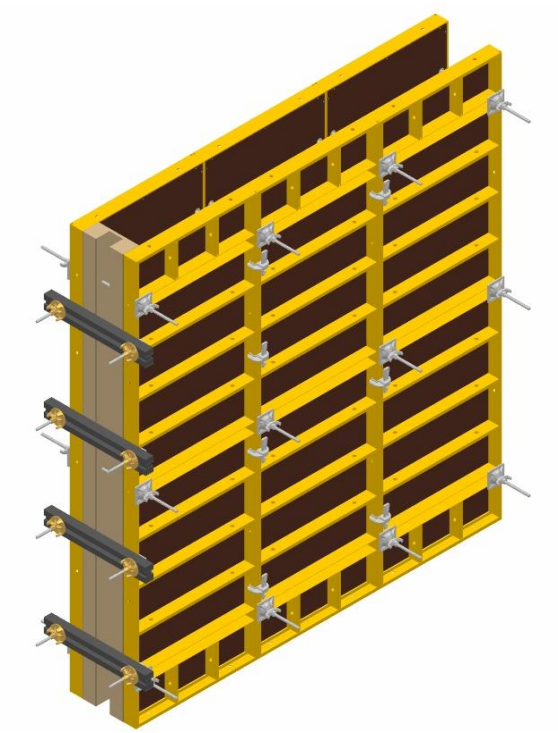

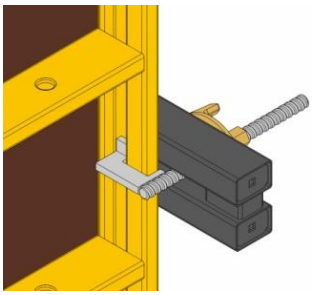

Each adjacent joint is reinforced with an additional clamp.

4.7.2. With universal panel

The Universal Panel is fixed to the standard panels with Panel Bolt and Plate Washer Nut.

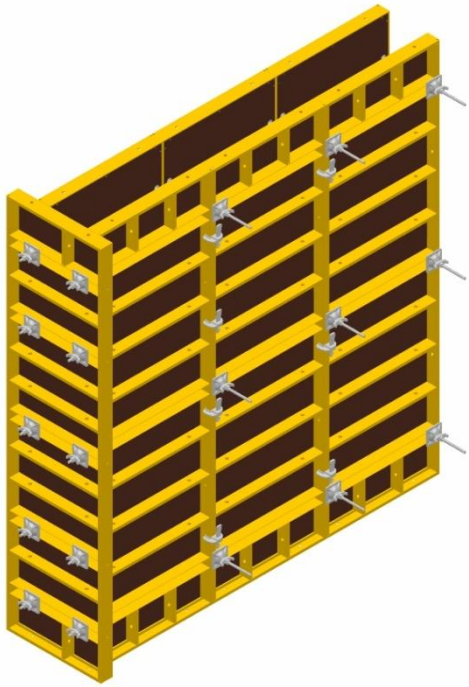

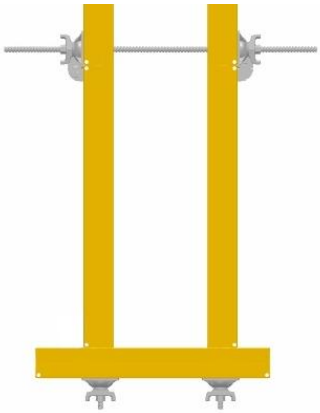

4.8. COLUMN SOLUTIONS

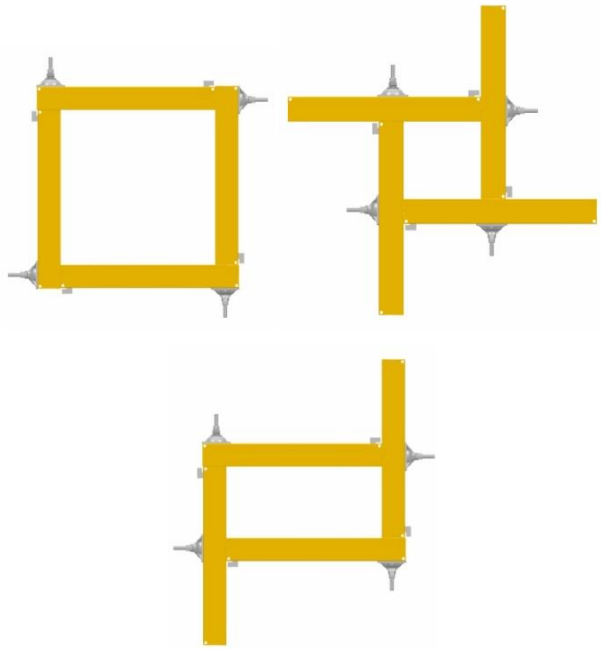

Columns are formed by the joining of universal panels. The joint is fastened with ML Bulkhead Hook and Plate Washer Nut. As has been mentioned in the section about 90° corners, the universal panels have several U-shaped ribs with holes spaced each 5 cm (through these holes the bulkhead hooks or the panel bolts are passed). With the holes, the column size is adjusted.

The ML Bulkhead Hooks are passed through the lateral holes of the panel.

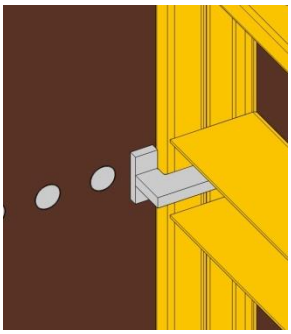

Square and rectangular columns can be formed with the following possible dimensions:

* Maximum column dimensions: 65 cm x 65 cm
* Minimum column dimensions: 10 cm x 10 cm

- <u>Rectangular column with more than one panel on the long sides</u>:

In this case, it is necessary to use intermediate tie rods.

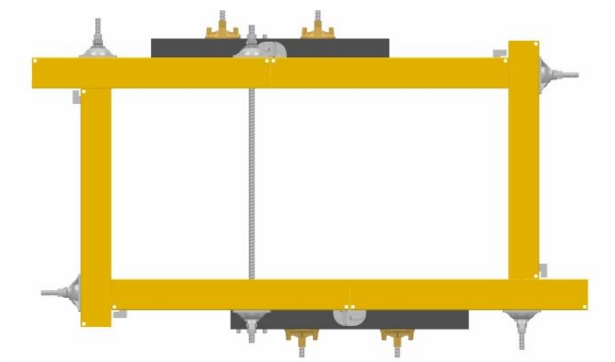

4.9. OTHER SOLUTIONS

4.9.1. Walls with thickness variation

- Variation up to 15 cm: formed with wood planks and standard panels fastened with walers 0.75 m

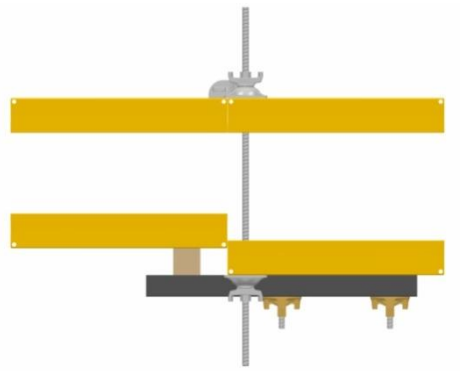

4.9.2. Wall offset

- The solution consists in the use of the inside corner panel with universal panels and standard panels.

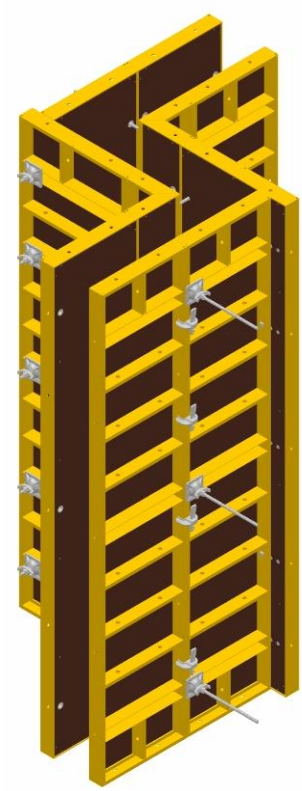

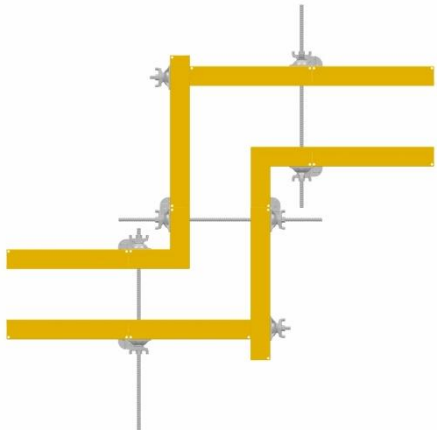

4.10. JOINING WALLS

Typical solutions for different wall types are described.

4.10.1. Joining to a transversal wall

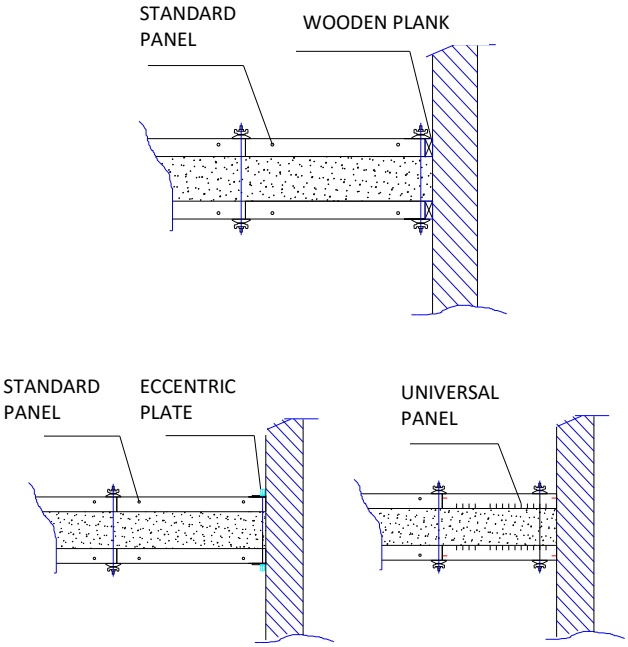

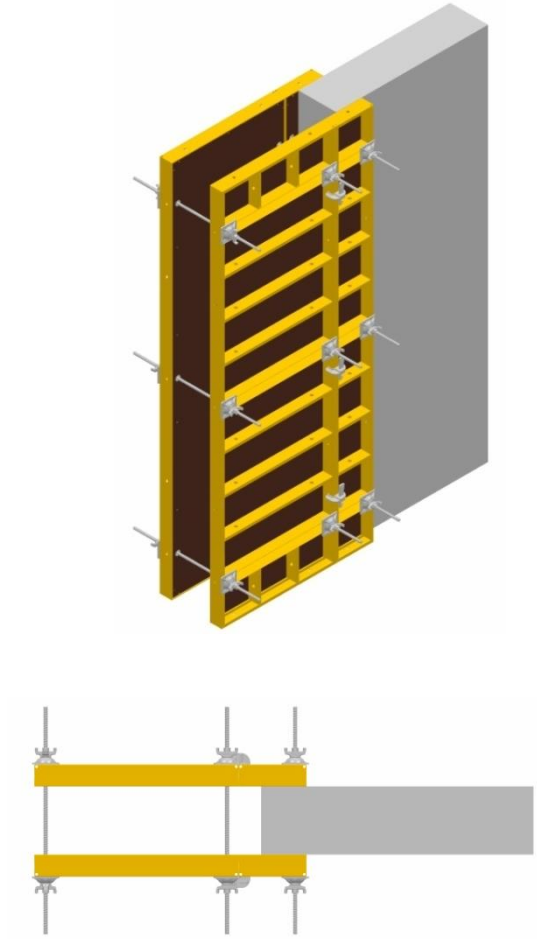

4.10.2. Joining to a longitudinal wall

There are many possibilities to join a wall to another previously built longitudinal wall depending on the panels used.

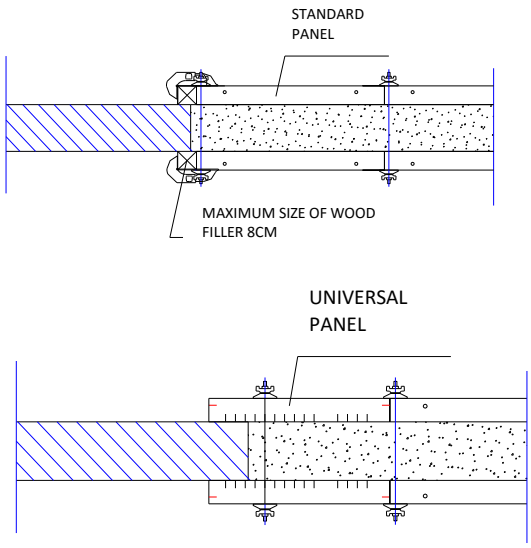

4.11. INCLINED WALLS

The overall assembly of these walls is the same as for straight walls, but taking in to account certain considerations with respect to their inclination.

The values indicated in this section refer to the use of panels with Tie Rods 15, and always vertically.

When pouring inclined walls, the formwork could be lifted up by the vertical forces exerted onto the shuttering faces, therefore it must be anchored to the ground prior to concrete placement.

An inclination of 14% can be achieved, that is about 8° with respect to the vertical.

The limiting component for the inclination is the dimension of the plastic sleeve in the tie holes of the panels.

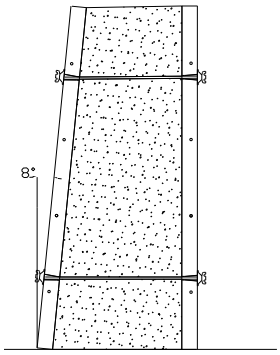

MAXIMUM INCLINATION OF A SINGLE FACE 8º

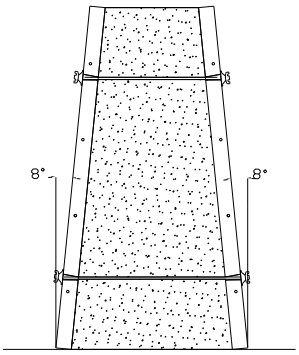

MAXIMUM INCLINATION OF BOTH FACES 2 x 8º

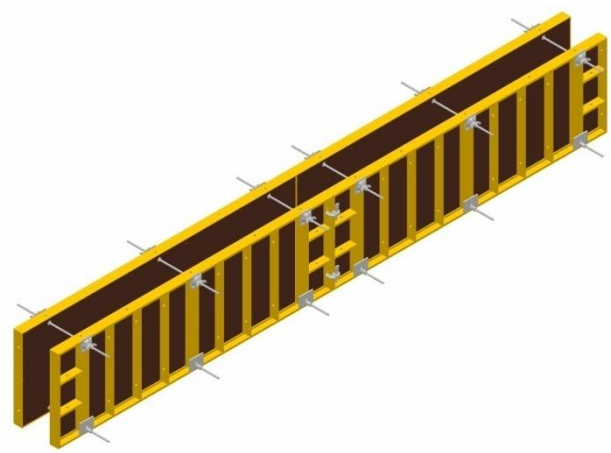

4.12. FOOTINGS

There are the following types of footings or foundations:

4.12.1. Open-air foundations

For open-air foundations, the panels are often used horizontally, and tie rods are used as can be seen in the below diagram.

- **Panel on the ground**

The lower form ties in the case of panels placed on the ground are fixed with Hexagonal Nut 15 on Eccentric Plate (instead of Plate Washer Nut). The upper ties are fixed in the standard way.

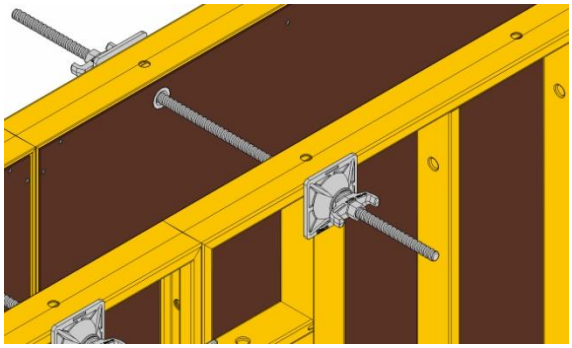

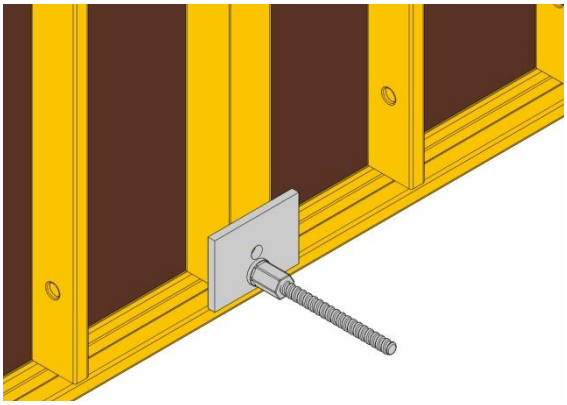

ITEM NO.	ITEM NAME	
7238049	Water Stop Cap 26	
7238047	Spacer Tube 22/26	
7238050	Plug for Water Stop Cap 26	

- **Panel on mudsills**

In this case, the lower ties are fixed with Plate Washer Nut resting on the profile and the wood.

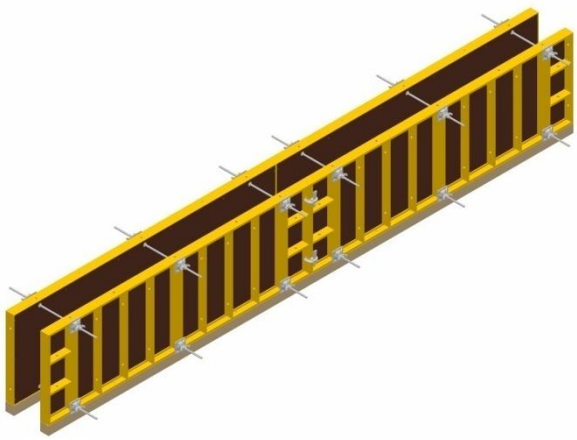

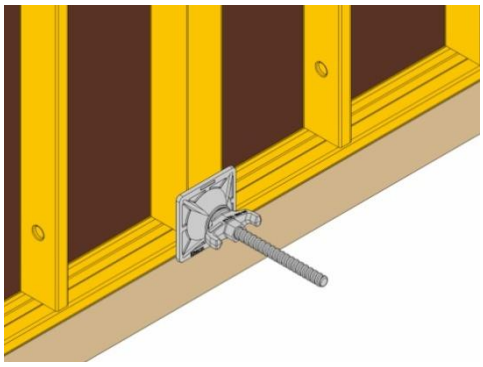

4.12.2. Foundations in trenches

In this case the slope of the ground is used to stabilise the formwork with wood planks to prevent it from moving, thus avoiding the use of tie rods.

4.13. WATERPROOFING

In the following section, the two basic waterproofing systems for walls are described.

4.13.1. Water Stop System 26

This system withstands a maximum water pressure (water column) of 10 m.

The water stop system is assembled as shown in the drawing below.

In a tank where the fluid pressure is only exerted onto one side of the wall, it is sufficient to fit this side of the wall with the Water Stop Cap 26 and the Cone 26 at the other end.

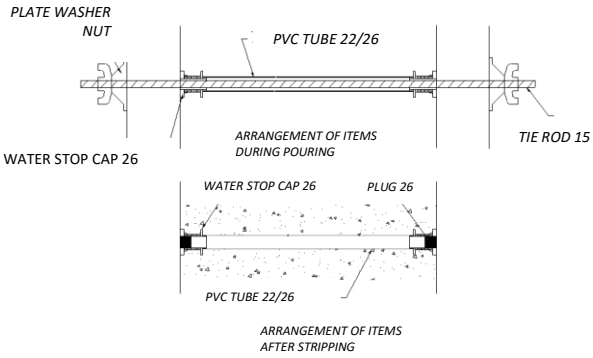

4.13.2. Water Stop System DW15

This system withstands a water pressure equivalent to a water column of up to 70 m.

It consists of a Water Stop Cap 15 and two Water Stop Adapters DW15 in the middle between the two formwork faces, for the screwing-in of the tie rod.

These items remain lost in the concrete.

ITEM NO.	ITEM NAME	
0230004	Water Stop DW15	
9371966	Water Stop Adapter DW15	

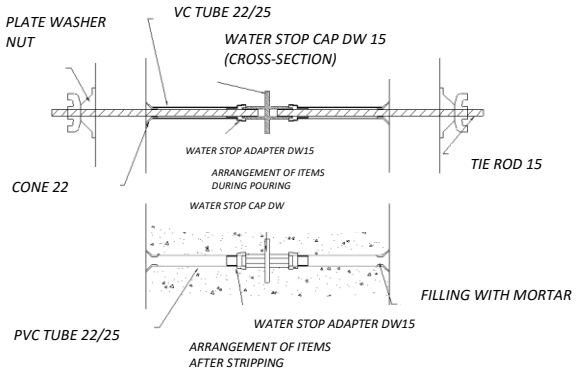

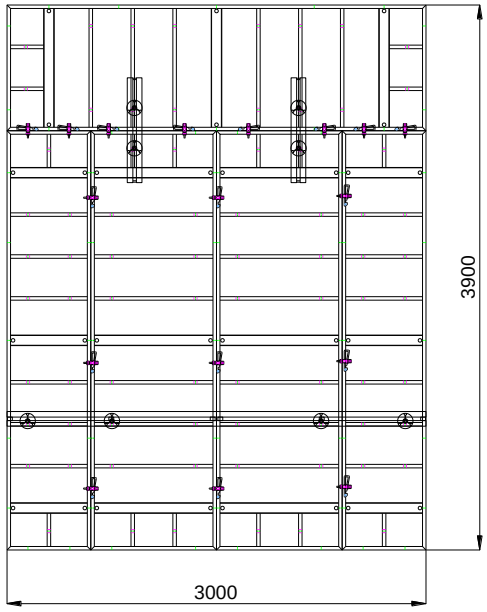

The maximum distance between brackets should not be more than 2 m.

4.14. CLIMBING

The climbing bracket is the main item for the support of double-sided formwork.

The climbing formwork is raised vertically above the ground. Therefore a working platform at the required height becomes necessary; this platform is supported on the climbing brackets.

This climbing bracket only suits wall heights up to 20 m with maximum panel gangs of 3.9 m and 3m wide

Double-sided climbing for the construction of high walls or in the case of more demanding safety standards is done with other kinds of climbing brackets.

In this section, it is only looked at the climbing solution with cones embedded in the concrete.

The climbing brackets are raised independently from the panel gangs.

It is recommended to install a climbing bracket approximately every 2.7 m.

4.14.1. Cone on tie rod level

This method only works with double-sided wall climbing because the idea is to use the form ties, usually the ones at top of the panels, to embed the climbing cones in the concrete. The cones are assembled to the tie holes of the panel thus avoiding the drilling of more holes into the board. This is done with the cone and the **Cone-Waler Connector** inserted in the top hole of the panel.

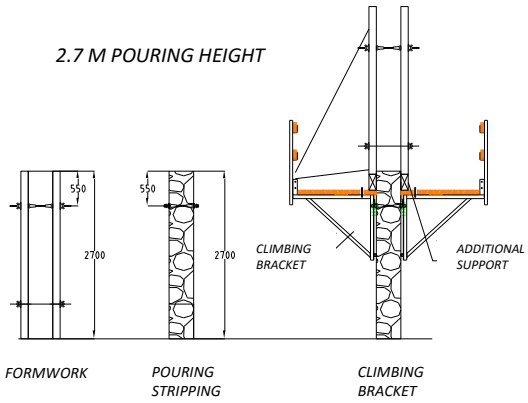

The climbing consists of the following stages:

- Assembly of cones and form ties to the panel. The cones are tied to the formwork through the upper tie holes with the cone-waler connector.

  The length of the tie rod depends on the wall thickness and is calculated as this: L=thickness-160mm. The tie rod remains lost in the concrete.

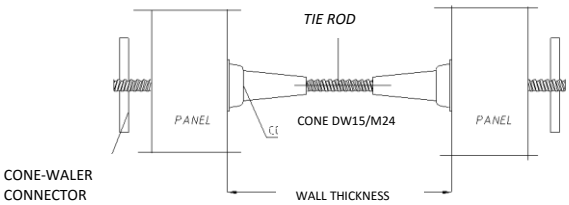

PHASE 1 - FIXED TO PANEL

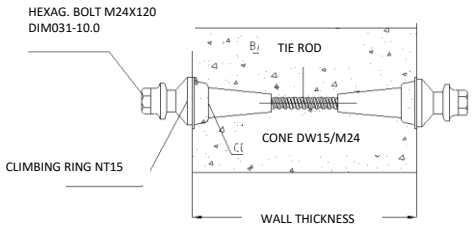

PHASE 2 - EMBEDDED IN WALL

- After stripping, the Climbing Ring NT15 is tied to the cone and fastened with a Hexagonal Nut M24x120.
- Then the climbing brackets are placed onto the climbing rings.

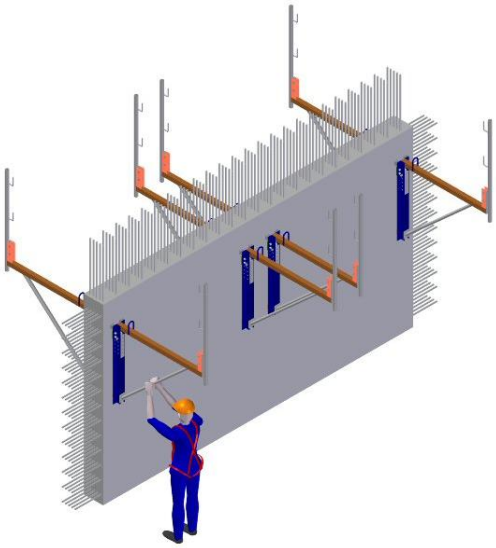

- 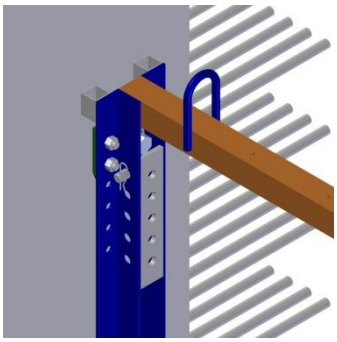

- Two climbing brackets are braced to each other with tubes D48, fixed couplers 48 and swivel couplers 48/48.

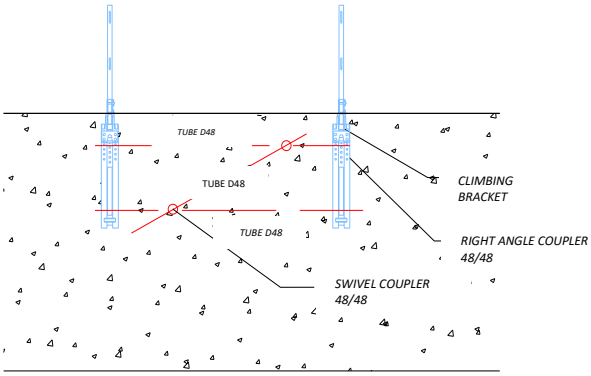

- As platform decking and safety railing, use:
  - planks for the platform: minimum 20x5 cm
  - planks for the handrail: minimum 15x3 cm
- The first formwork face is lifted and placed with the corresponding push-pull props.

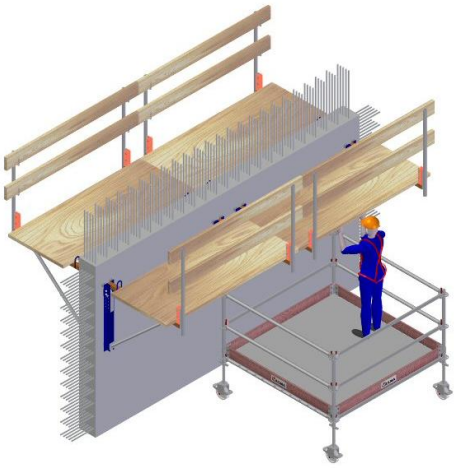

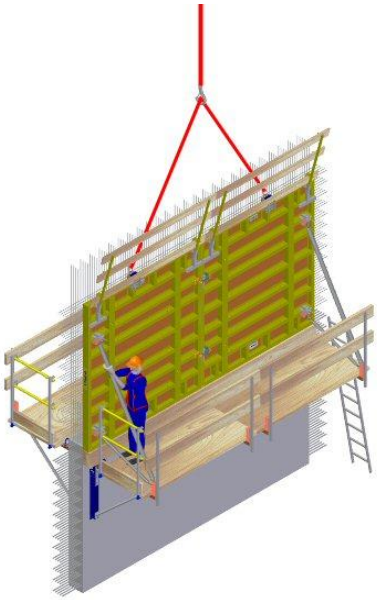

- The other face is joined to the first with tie rods, and the concrete is poured.

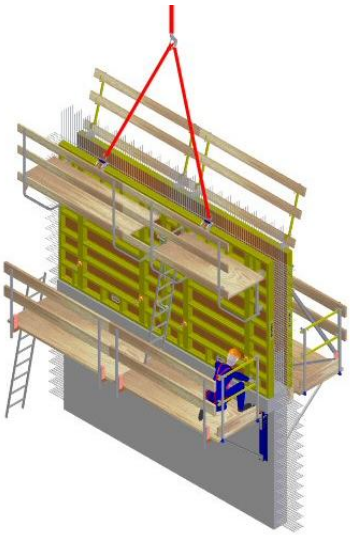

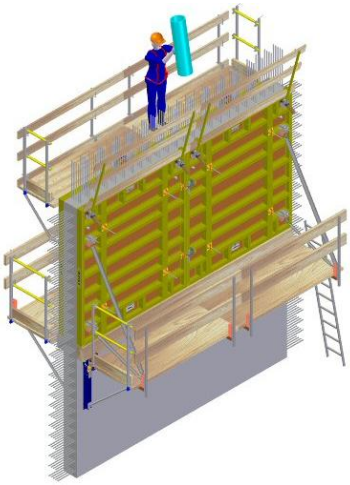

- The panels are removed (stripping), the climbing ring is assembled to the cones, and the climbing system is lifted up onto the next cones.

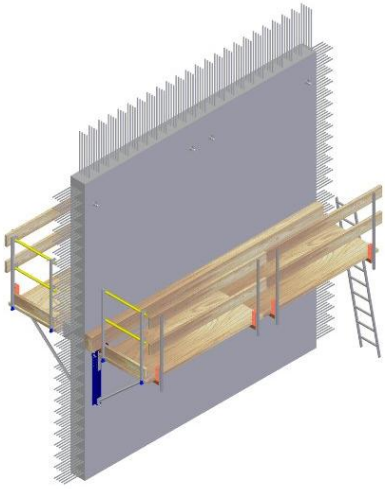

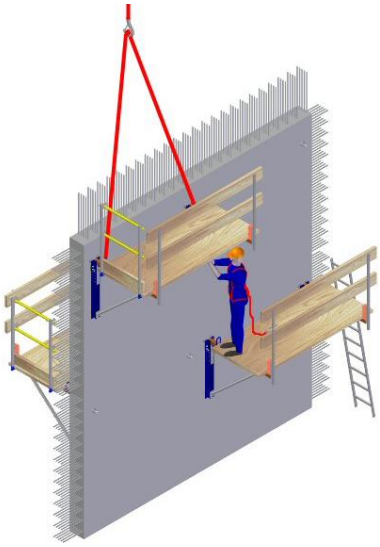

4.14.2. Cone on plywood

This solution should only be adopted in those cases where for example openings, windows etc. prevent the tying of the climbing components to the upper form ties, because it means drilling more holes into the board.

This method places the anchoring points of the climbing system anywhere on the panel; it can therefore be used for single-sided and double-sided wall climbing.

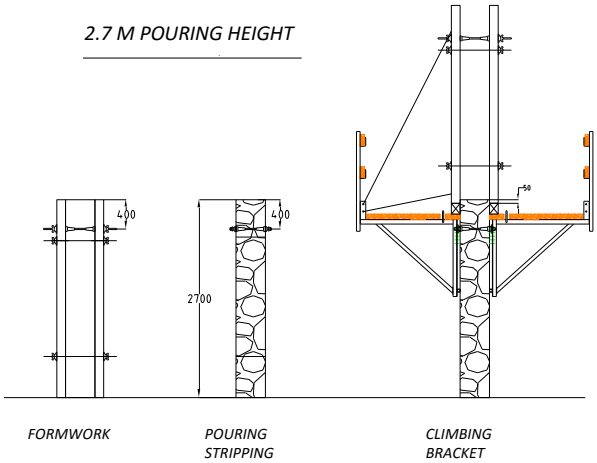

For the case of double-sided wall climbing, the arrangement of the items is as follows:

- Drill holes into the panels of both form faces, and fix the Cone M24/DW15 through the hole from the inside of the panel with the Climbing Ring NT15 and the Bolt M24 from the outside.

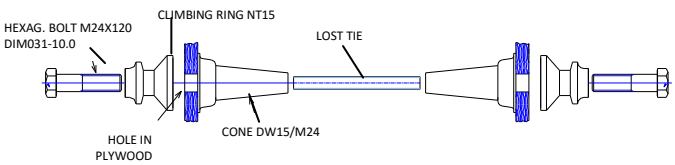

For the case of single-sided wall climbing, the arrangement of the items is as follows:

- Drill holes into the panels of the single form face, and fix the Cone M24/DW15 through the hole from the inside of the panel with the Climbing Ring NT15 and the Bolt M24 from the outside.

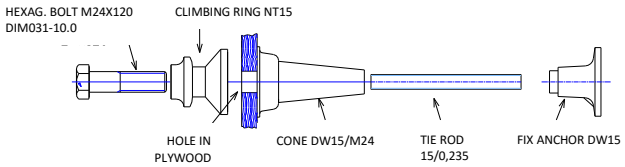

- The following steps are identical to the previously mentioned ones.

4.15. SINGLE-SIDED WALL FORMWORK

LGW panels also suit single-sided wall formwork solutions but the special characteristics of this type of projects require a particular solution. Please refer to the documentation dealing with these solutions.

5. System Properties

5.1. CONCRETE PRESSURE

The calculation of the fresh concrete pressure on the formwork is based on the German standard DIN 18218:2010. These are the variables to be taken into account for the calculation:

- FRESH CONCRETE DENSITY (a normal value is 25 kN/m^3)
- CURING TIME (may vary between 5h to 20h)
- REFERENCE TEMPERATURES (for POURING and MINIMUM until the end of curing): depending on the value of these temperatures, the final pressure must be increased or decreased by a certain percentage (see DIN 18218:2010)
- CONCRETE CONSISTENCY CLASS (F1-F2-F3-F4-F5-F6 and SVB)
- POURING RATE (between 0 to 7 m/h)

The calculation table below shows the assumed CURING TIME: 5h (depending on the CURING TIME, different tables are given in DIN 18218:2010)

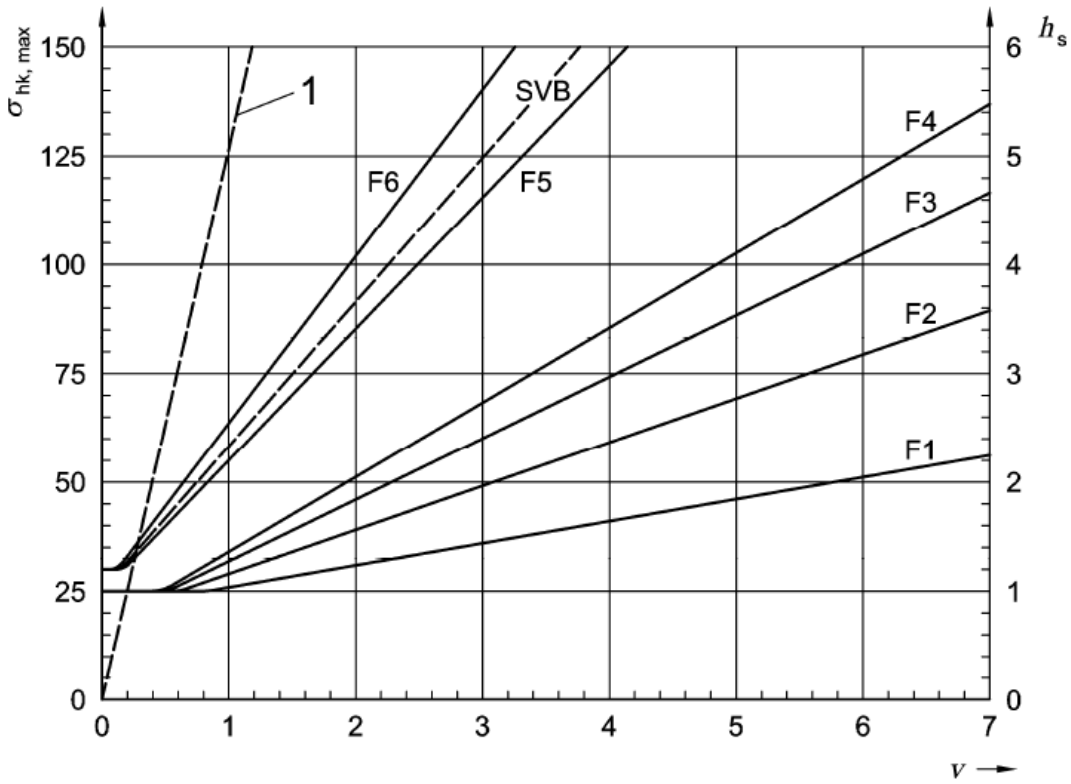

Note: The calculation of the fresh concrete pressure according to DIN 18218 only applies to inclinations of ± 5° with respect to the vertical.

5.2. WORKING LOADS OF PANELS

WORKING LOADS OF PANELS			
			Maximum concrete pressure according to DIN 18202[1]
Panel	***m²***	***Load type***	***Group 6***
3x0,9	2,7	Maximum hydrostatic pressure (kN/m²)	75
		Maximum constant pressure (kN/m²)	60
2,4x0,9	2,16	Maximum hydrostatic pressure (kN/m²)	60
		Maximum constant pressure (kN/m²)	60
3x0.75 UNIVERSAL	2.25	Maximum hydrostatic pressure (kN/m²)	80
		Maximum constant pressure (kN/m²)	80

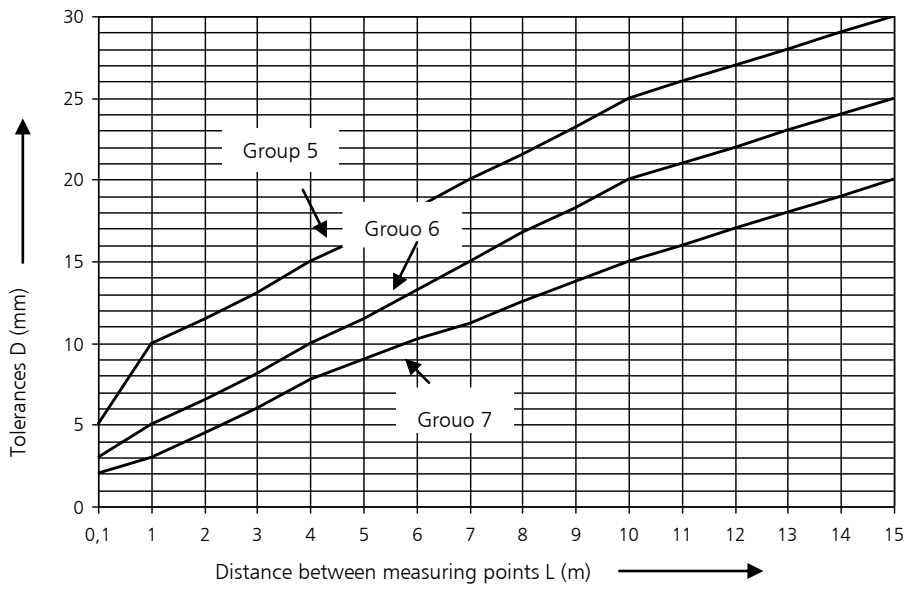

DIN 18202 (Flatness tolerances): In the above table, the different quality levels of wall finishes are shown.

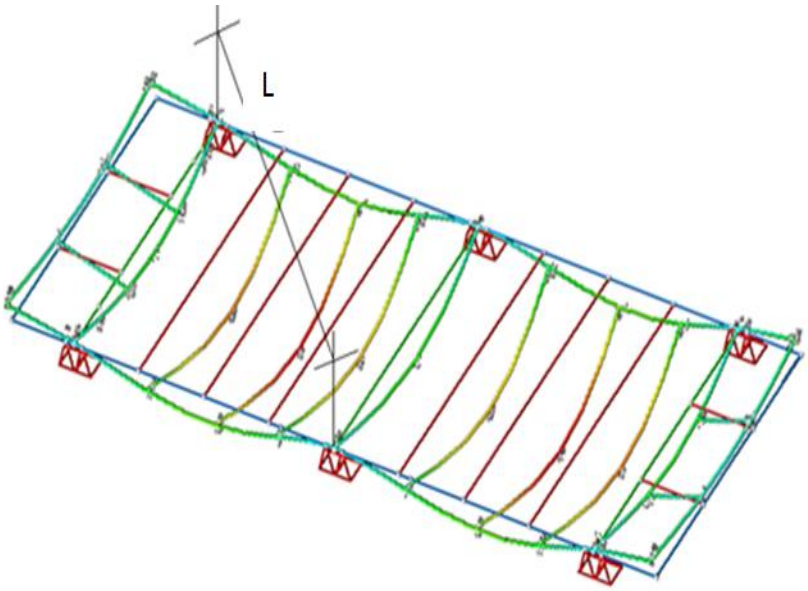

5.3. WORKING LOADS OF SYSTEM COMPONENTS

In the following tables, the permissible working loads of different items are shown:

Item no.	Item name	Figura	Carga de Uso
7238001	Hexagonal Nut 15		**90kN**
7238000	Plate Nut 15		**90kN**
1900256	Plate Washer Nut 15		**90kN**
0230004	Water Stop DW15		**90kN**
1861094	Walkway bracket		**150 kg/m^2**
1920835	Lifting Hook		**1,2kN**

Ø15 mm tie rods are used with the LGW panels to withstand the concrete pressure. The following table the permissible working load.

Tie rod (Ø15 mm)	
Working load (kN) According to DIN 18216	90

It should be noted that the tie rods should neither be welded nor heated.

5.4. FORM TIE SYSTEM

The tying of the panels is based on the 15 mm tie rod, and moreover requires the following items:

ITEM NO.	ITEM NAME	
7230455	Spacer Tube 22/25	
7230264	Cone 22	
s/Length	Tie Rod 15	
1900256	Plate Washer Nut 15	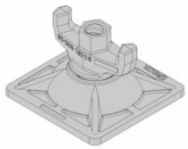

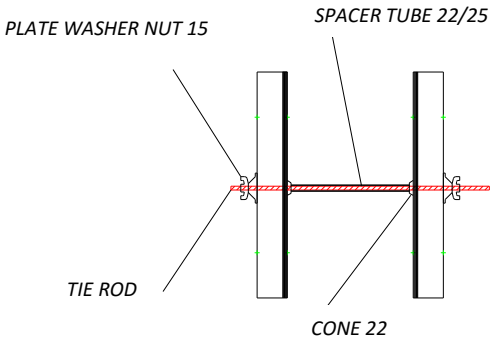

After stripping, the tie holes may be closed in the following ways:

- Plug 20 (item no. 1861799) into Cone 22
- Remove cone 22 and place Plug 22 (item no. 1900159) into Spacer Tube 22/25 lost in the concrete wall

6. Terms and Conditions of Use

6.1. SAFE OPERATING GUIDELINES

- It is advised to follow the instructions of the project plan at all times.
- It is advisable to follow the instructions of use for the employed equipment. Consult operating manuals of the manufacturer or distributor.
- Formwork erection and stripping works are carried out by qualified personnel only, and under the supervision, control and guidance of a competent person.
- If the building site is located nearby high voltage power lines, it is recommended to work without power supply. If this is not possible, the appropriate measures according to the respective reference standard should be taken.
- Working with wind speeds of more than 60 km/h, ice or snow is forbidden.
- The employed crane must be of sufficient capacity for the handling of the modules.
- The statutory auxiliary equipment for lifting has to be appropriate to bear the loads to lift and must be checked before each use and removed from service, if not working properly.
- If the NEVI Lifting Hook is used, its use must comply with the instructions in the user guide given by the manufacturer.
- Under the circumstances that the crane operator has no visual control of the entire trajectory of the load, the crane operations are guided by a banksman who is in constant communication with the crane operator by means of a previously agreed sign code.
- Do not stand, walk, or work under suspended loads, nor under the trajectory or in the vicinity of these loads.

6.1.1. Formwork

- Place some racks to store or move the formwork panels that prevent their damage and ease the building site order, the panel cleaning and the transport to their area of operation.
- The installation and assembly of the gangs is carried out following safe operating procedures.
- Levelling and appropriate stabilisation must be ensured according to the terrain and/or weather conditions.
- Ensure the correct anchorage of the previous formwork set, before placing the next.
- Do not leave any part half-assembled or half-dismantled.
- Prevent overloading of working platforms by keeping only the necessary items to ensure a good work-flow.
- It is forbidden to climb on formwork except in extraordinary cases duly studied and with appropriate protection systems in place.
- Special attention should be paid to the tightening of the clamp wedges holding together the panel joints to prevent concrete leaking.
- Ensure the tightening of plate nuts, and the correct positioning and anchorage of push-pull props to the ground.
- Comply with the maximum hydrostatic pressures according to the instructions of the respective formwork system.
- A clean surface of the formwork is indispensable for a good finishing.
- The cleaning of the panels is done with a cloth or brush impregnated with some release agent after each use. Wire brushes are not suitable because they can damage the phenolic coating of the board.

- It is important to state that the phenolic coating rarely suffers from the chemical and abrasive action of the concrete. But where it is already damaged, e.g. at holes and deteriorated areas, it must be thoroughly sealed to prevent any further damage to the plywood.
- Any cut edge of the plywood should be sealed as soon as possible, because cut edges soak up water from the concrete and swell, thus increasing in thickness.
- In general, it is not recommended to use nails or screws on the plywood.
- Panels should be stored after their final use on site. The panels should be cleaned and stacked one on top of the other by placing wood runners between them. Use some sort of support to separate them from the ground, and provide shelter. Prolonged sun and rain exposure damages the panels.

6.1.2. Release agent

- Release agent helps separating the formwork from the concrete, and thus increases the number of uses and the life span of the panel in general.
- It plays an important role for the quality of the concrete finishing because it prevents holes from air bubbles on the concrete surface and provides a uniform colour.
- Apply the release agent uniformly and in thin layers onto the panel, bearing in mind at all times the instructions for correct use.
- Thoroughly clean the panel surface before applying the release agent on it.
- Clean the metal frame and the panel off the release agent after every 4 to 5 uses.

6.1.3. Concrete casting

- Cast the concrete from the least height above the formwork possible. Do never exceed 2 m height unless a pipe or tube or any similar accessory is used to channel the concrete. Deposit the concrete as near as possible to the formwork base, centring on one point without casting it directly against the formwork.
- Place the concrete in uniform layers of 30 to 45 cm.
- Continuously check the state of the formwork during concrete casting. Stop further casting in case of any incident.
- Avoid mortar splashes on the panels as these will reflect on the finished surface.
- When casting with bucket, take special care of not hitting the formwork, and of complying with the maximum load-bearing capacity of the crane.
- Use the appropriate method for concrete consolidation and compaction depending on the concrete consistency and its workability. The preferred consolidation and compaction method are poker vibrators.
- Use external vibrators only when the concrete cannot be accessed with poker vibrators and for parts moulded already in the workshop.
- Completely immerse the poker 10 to 15cm into the concrete, and put it into each area of concrete, only once. When concrete is poured in layers, place the vibrator into the previous layer to meld the two layers together.
- Never allow the vibrator to touch the formwork to prevent exceeding the considered loads.
- Immerse vertically or slightly inclined and quickly. Hold it still for 10 to 30 seconds (depending on the concrete and vibrator type) or well until the concrete comes up to the surface.
- Slowly withdraw the vibrator.

6.1.4. Stripping and curing

- Check that curing is sufficiently advanced for stripping without causing spalling at the concrete surface which destroys the finishing and can affect the strength and durability of the concrete.
- Increase the curing time of the concrete when facing fast drying and shrinkage due to evaporation from wind or low temperatures.
- The time span between casting and stripping shall be the same for all parts of the concrete structure. This is justified when a high finishing quality is aimed for because the tone of the concrete surface depends on how long the concrete surface is isolated from the outside.
- Ensure the absence of unauthorised people in the vicinity where stripping takes place. Furthermore, check that no loose material remains on the structure, e.g. on working platforms, in danger of falling from it, and striking persons below.
- Stripping of vertical formwork panels shall be done top down.
- Once stripping is finished, place the formwork units on frames and proceed with cleaning and dismantling, if they are not going to be used for further casts.
- The material must be checked before each further use to ensure that all system components are working properly.

6.1.5. Personal and collective protection equipment

- For the execution of works, only statutory auxiliary safety items or working platforms with their corresponding statutory safety handrail system (collective protection equipment) are employed.
- Personal protective equipment (PPE) should comprise at least safety helmet, safety footwear, protective gloves and tool holder belt.
- It should be taken into account any further required PPE to comply with the occupational health and safety guidelines according to the risk assessment of the building site.

6.1.6. Safe handling guidelines

Proper storage of the parts is fundamental to keep them in good working condition.

Optimal storage conditions are the following:

- Place parts of the same type and dimensions in its respective container (boxes, steel pallets, etc.).
- Do not strap the bundles excessively tight so they are getting bent.
- Strap the bundles sufficiently stable to prevent them from moving and getting damaged.
- If necessary, protect the items with some sort of buffer.
- Avoid the parts suffering blows and crushing during transport, handling and storage.

6.1.7. Maintenance instructions

- CLEANING OF THE PLYWOOD:

Remove nails using a hammer and clean the shuttering face with a wire brush in order to remove concrete remains and other debris.

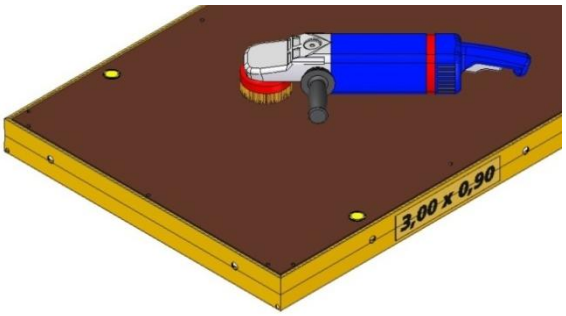

- CLEANING OF THE FRAME:

Scrape the sides of the frame with a putty knife to remove concrete remains.

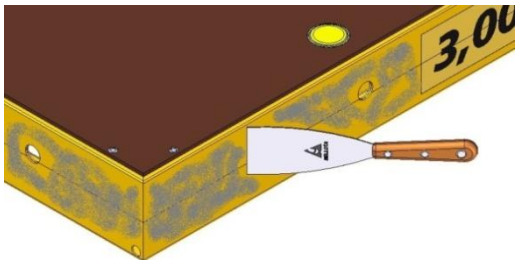

- LUBRICATE THE BOARD:

After having cleaned the shuttering face, apply release agent with a roller.

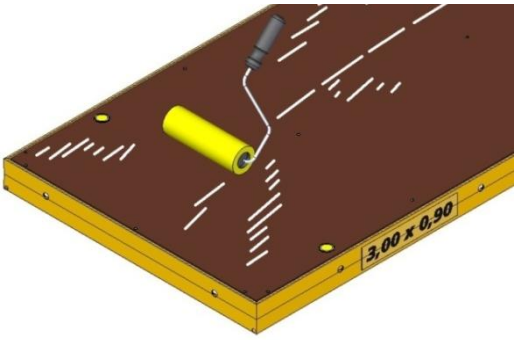

6.2. LIFTING HOOK

- The NEVI Lifting Hook should be used in a way, it does not jeopardise the health and safety of people.
- The NEVI Lifting Hook must not be used in an application other than the one described in this User Guide.
- The NEVI Lifting Hook may only be used for the lifting of ULMA panels or gangs designed for this purpose. They must not be used for other applications or with other formwork systems at all.
- If the NEVI Lifting Hook is not working properly, it should be immediately returned for repair.
- Strictly avoid the NEVI Lifting Hook suffering strong blows and crushing from handling, storage and transport, and above all, from handling of the formwork with the hook.
- The NEVI Lifting Hook should remain in a place protected from atmospheric and aggressive impact to avoid wear.
- Any person using the NEVI Lifting Hook who observes the wear or damage of any part of it, should immediately removed that part of hook for repair

.

- Under no circumstances should neither the self-blocking nut nor the connecting bolt be tampered with or changed, being only ULMA staff authorised to do so.
- Checks and repairs of the NEVI Lifting Hook should be carried out by skilled personnel only, and with the necessary information at hand.
- Ensure that the crane hook is properly inserted into the ring of the NEVI Lifting Hook, and that safety latch correctly closed.
- Ensure that slings used to raise the panels are placed symmetrically. For this, study where to attach the NEVI Lifting Hooks to the panel gang.

- In large long-lasting constructions, it is advisable to periodically check the parts (once each six months) for the timely recognition of any damage.
- Do not put yourself under the load!
- Ensure a steady and smooth travel of the panels. Avoid any sudden jerky movements.
- Always use gloves and steel-toe safety boots for hand and foot protection during the fixing of the NEVI Lifting Hook and when lifting panels. Always use safety helmet for head protection.
- The hook must only be used where sufficient light is available (more than 100 lux).

6.2.1. Inspection instructions for the NEVI Lifting Hook

The Hooks should be checked at least once a year by qualified ULMA staff or, alternatively, by another person who has been previously trained by ULMA.

The following table shows the aspects which should be checked in any inspection of the NEVI Lifting Hook:

TYPE OF INSPECTION	COMPONENT	FAULT	INSPECTION FREQUENCY	CRITICAL YES / NO	REPAIR
Visual	Fixed and mobile part	Cracked, broken or highly corroded welding	Each time used and delivered to site	Yes	Scrap
	Chain shackle, chain and ring	Excessive deflection or wear	Each time used and delivered to site	Yes	Scrap
	Hexagonal bolt, self-blocking nut	Check the fixing/tightening of the items Deformations	Each time used and delivered to site	Yes	Replace components
	Spring	Missing	Each time delivered to site	No	Replace component
	ID plate	Missing component	Each time delivered to site	No	Replace component
	Condition of the surface	Dirt affecting operation and moving of mobile parts	Each time used and delivered to site	No	Clean

VERY IMPORTANT:
The self-blocking nut and the hexagonal bolt are single-use items and must be replaced by new items in the event of loosening.

7. Legal references

89/391/EEC Council Directive on the introduction of measures to encourage improvements in the safety and health of workers at work

89/654/EEC Council Directive concerning the minimum safety and health requirements for the workplace

92/57/EEC Council Directive on the implementation of minimum safety and health requirements at temporary or mobile constructions sites

92/58/EEC Council Directive on the minimum requirements for the provision of safety and/or health signs at work

89/655/EEC Council Directive concerning the minimum safety and health requirements for the use of work equipment by workers at work

89/656/EEC Council Directive on the minimum safety and health requirements for the use of work equipment by workers of personal protective equipment at the workplace

90/269/EEC Council Directive on the minimum safety and health requirements for the manual handling of loads where there is a risk particularly of back injury to workers

2002/44/EC Directive of the European Parliament and the Council on the minimum health and safety requirements regarding the exposure of workers to the risks arising from physical agents (vibration)

2003/10/EC Directive of the European Parliament and the Council on the minimum health and safety requirements regarding the exposure of workers to the risks arising from physical agents (noise)

EN 13374 Temporary edge protection systems Product specification, test methods

7.1. DECLARATION OF CONFORMITY: NEVI LIFTING HOOK

DECLARATION OF CONFORMITY
According to the European Union Machinery Directive 98/37/EC

ULMA C y E, S. Coop, hereby, declares that the product of the below mentioned item no. and name complies with respect to its design and manufacture with the indications aimed to ensure people's safety according to the European Union Machinery Directive 98/37/EC. This declaration is valid until the product is modified.

Item no: 1920835
Item name: NEVI LIFTING HOOK

Oñati, 23 January 2009

Signed by

Aitor Ayastuy, General Manager

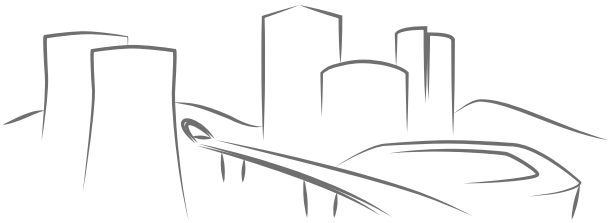

ULMA

From the beginning of your projects

ULMA C y E, S. Coop.
Ps. Otadui, 3 - P.O. Box 13
20560 OÑATI Spain
T. +34 943 034 900
F. +34 943 034 920

www.**ulmaconstruction**.com